THIS COPY IS PROVIDED ON A RESTRICTED BASIS AND IS NOT TO BE USED IN ANY WAY DETRIMENTAL TO THE INTERESTS OF PANDUIT CORP.

NOTE:

1. ALL DIMENSIONS ARE REFERENCE ONLY.
2. DIMENSIONS IN PARENTHESES ARE METRIC.
3. THE * * DENOTE COLOR.
4. DUCT AND COVER ARE AVAILABLE IN 6 FT (1828.6) LENGTH.
5. PANDUIT DRDSF PLASTIC SCREW FASTENERS INCLUDED TO FASTEN USER SUPPLIED DIN RAIL TO DRD BASE.
6. LOCATING RIBS COMPATIBLE WITH 15 OR 35 mm DIN RAIL.

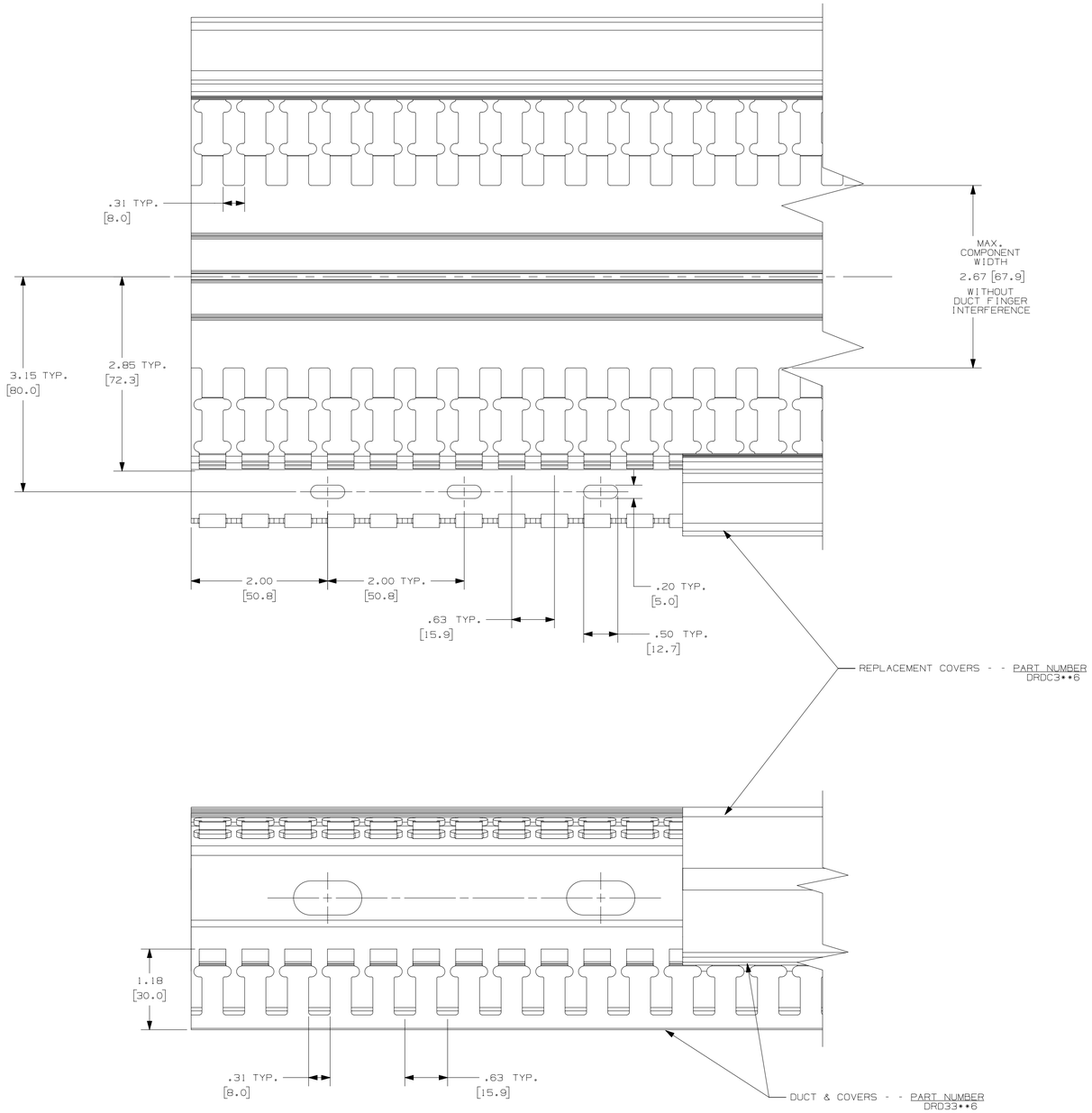

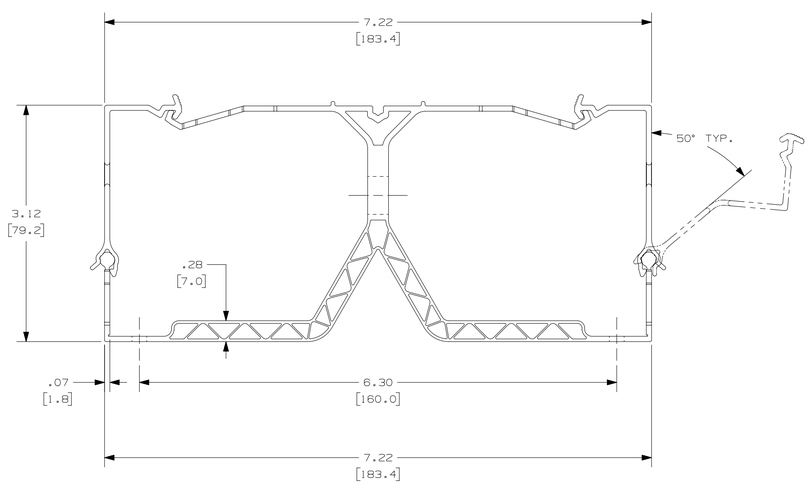

REV	DATE	BY	CHK	APR	DESCRIPTION	ECN
5	08.03.14	BDK	MRJS	JADE	J. DRAWING REVISION 4 ITEM G SHOULD STATE "UPDATED PROFILE TO NEW DESIGN"	36897-1250

TITLE: WIRING DUCT - TYPE DRD33
DIN RAIL DUCT WITH COVER
MARKETING DRAWING

ITEM REVISION NAME: D11000VE/04
DATASET FILE NAME: D11000VE_DC/04B

UNLESS OTHERWISE SPECIFIED, DIMENSIONAL TOLERANCES ARE: IN [mm]
.X ± .XXX ±
.XX ± ANGLES ±
THIRD ANGLE PROJECTION

MATERIAL: PVC

DRAWING NUMBER: 36897-1250

DRAWN BY	DATE	CHK	SCALE	SIZE
JCST	06-12-08	MKBE	FULL	D

SHT 1 OF 1

D:\D1000DC/14