THIS COPY IS PROVIDED ON A RESTRICTED BASIS AND IS NOT TO BE USED IN ANY WAY DETRIMENTAL TO THE INTERESTS OF PANDUIT CORP.

NOTES:

1. RACK GROUNDING EQUIPMENT JUMPER KIT
   PART NUMBER: RGEJ624PHY
2. PACKAGING: 1 KIT PER BAG; 10 KITS PER BOX
3. ALL COMPONENTS THAT MAKE UP THIS KIT
   ARE RoHS COMPLIANT.

LISTED
GROUNDING AND BONDING EQUIPMENT

CERTIFIED

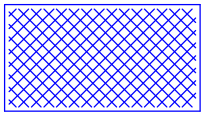

CLEANING PAD (QTY. 1)

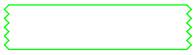

5cc TUBE ANTI-OXIDANT PASTE (QTY. 1)

#12-24, M6, #10-32, & M5
SLOTTED HEX-HEAD ZINC PLATED
THREAD-FORMING SCREW (QTY. 2 OF EACH)

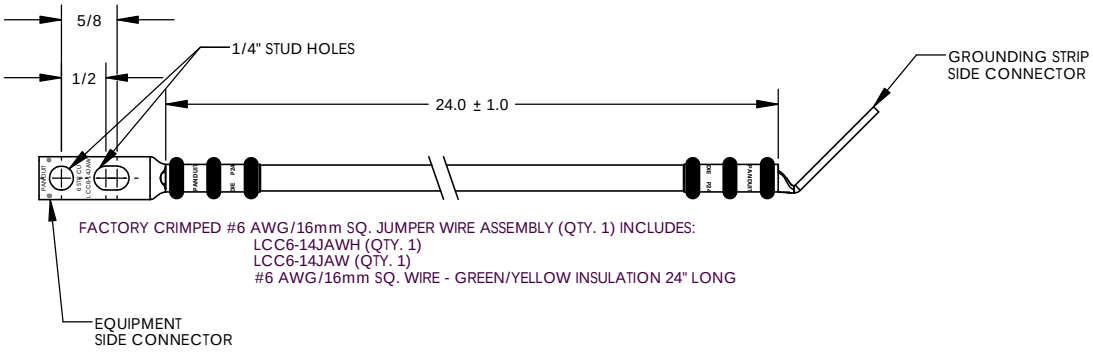

C41640_01

REV	DATE	BY	CHK	DESCRIPTION	ECN	PM	CUST
01	3/06	JHNU	CSH	REMOVED CE SYMBOL FROM DRAWING	PC00362		
00	2/06	JHNU	CSH	DRAWING RELEASED	PC00325		

PANDUIT CORP. TINLEY PARK, ILLINOIS

EQUIPMENT JUMPER
(RGEJ624PHY)
CUSTOMER DRAWING

UNLESS OTHERWISE SPECIFIED
DIMENSIONAL TOLERANCES ARE:
(.X) ± (.XXX) ±
(.XX) ± ANGLES ±

UNLESS OTHERWISE SPECIFIED, ALL DIMENSIONS ARE GIVEN IN INCHES, THIRD ANGLE PROJECTION

DRAWN BY JHNU
DATE 2/06
CHK'D
MAT'L:
SCALE NONE
DRAWING NO / CAD FILE C41640
DWG SIZE B