MICRO SWITCH
A DIVISION OF MINNEAPOLIS-HONEYWELL REGULATOR COMPANY
FREEPORT, ILLINOIS
FED. MFR. CODE 91929

SWITCH—BASIC

CATALOG LISTING
YA-3R64-A2

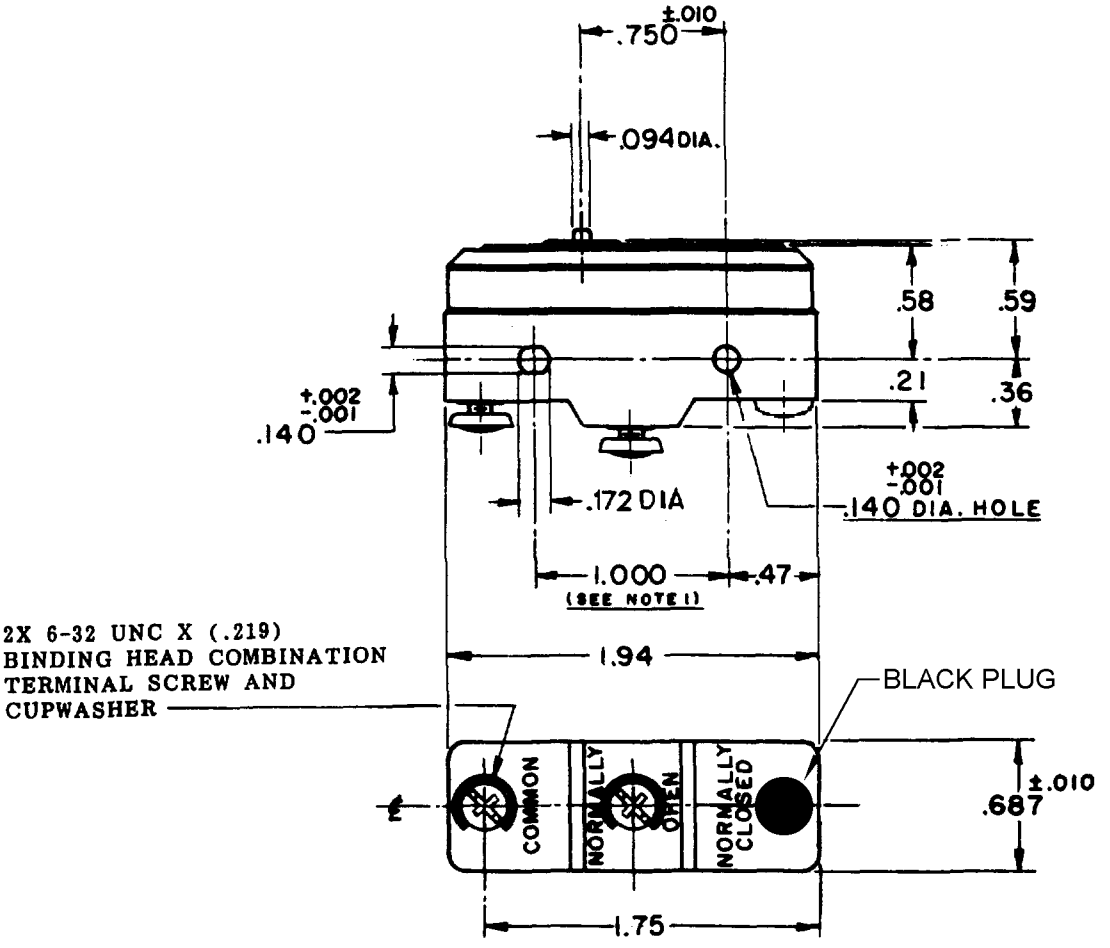

NOTE
1- MOUNTING HOLES WILL ACCEPT PINS OR SCREWS OF .139 MAX. DIA. ON 1.000 ±.002 CENTERS.

THIS DRAWING COVERS A PROPRIETARY ITEM AND IS THE PROPERTY OF MICRO SWITCH. A DIVISION OF HONEYWELL. THIS DRAWING IS NOT TO BE COPIED OR USED WITHOUT THE APPROVAL OF MICRO SWITCH.

CHARACTERISTICS

OPERATING FORCE----------30 OZ. MAX.
DIFFERENTIAL FORCE---------12-16 OZ.
RELEASE FORCE----------10 OZ. MIN.
OVERTRAVEL----------.010 MIN.

ELECTRICAL DATA

CONTACT ARRANGEMENT
S. P. N. O.

L23 — UNDERWRITERS' LAB. INC. LISTED RATING
20A - 125, 250 OR 480 VAC
10A - 125 VAC "L"
1HP - 125 VAC, 2HP - 250 VAC
1/2A - 125 VDC, 1/4A - 250 VDC

L288
L299
L308

20(3)A 250V ~ T85 5E4

SCALE FULL
DO NOT SCALE PRINT

UNLESS OTHERWISE SPECIFIED
DIMENSIONS ARE IN INCHES
TOLERANCES ARE:

ONE PLACE	(.0)	±.030
TWO PLACE	(.00)	±.015
THREE PLACE	(.000)	±.005
ANGLES		±

WEIGHT .063 LB.

YA-3R64-A2
PAGE 1 OF 1
M
DRAWING NUMBER
ISSUE 6
RELEASE NO. SR 7086
REPLACES
1 Nov. '57
CWR
CHECK
31 OCT. '57
CNT
CHECK
4 Nov. '57
GCH
CHECK
30 OCT. 57
K.L.B.
DRAWN
RASTER
74-98

REVISIONS

A	C034308	K P K 26 NOV 74
B	CO-73287-J	J A L 22 NOV 93
C	CO-77588	K D R 29 MAR 94
D	C093346	D L T 27 AUG 98
E	0000683	C S L 2 JUL 03