MICRO SWITCH
a Honeywell Division
FED.MFG.CODE 91929

SWITCH – BASIC

CATALOG LISTING
V7–5F17D8–289
CW–C5012

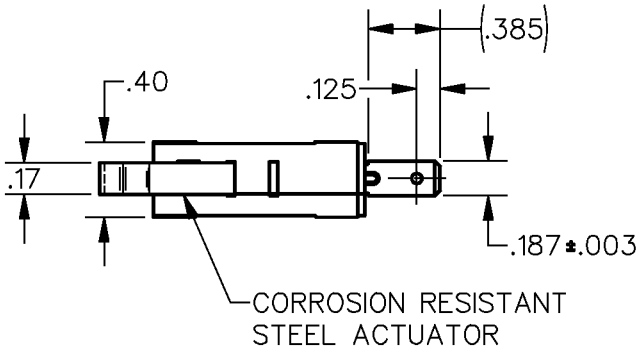

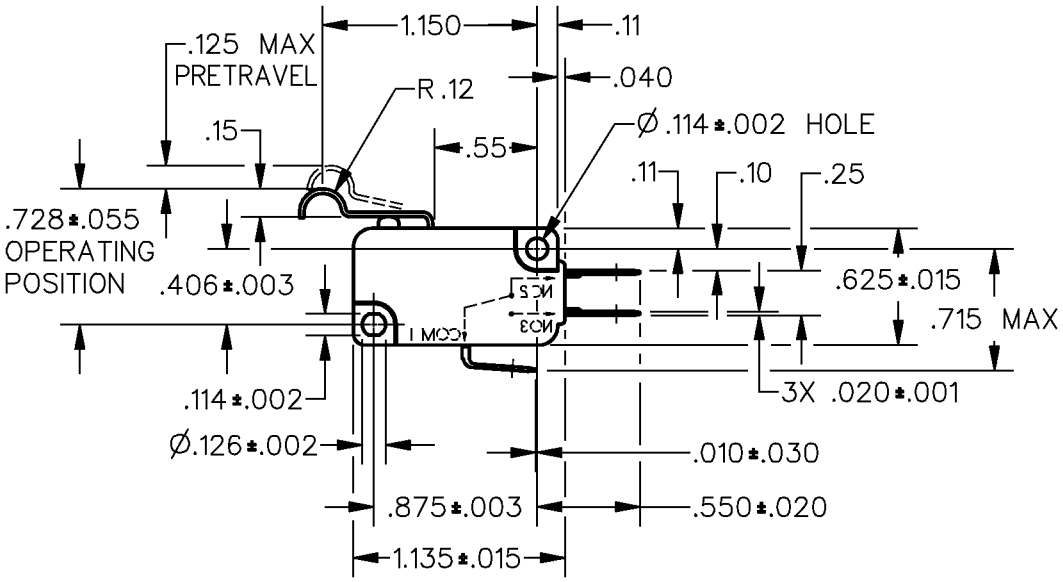

NOTES
1. FORCE CHARACTERISTICS TAKEN WITH SWITCH MOUNTING SURFACE HORIZONTAL
2 – CAUTION: OVERTRAVEL FORCE ON LEVER MUST NOT RESULT IN AN OVERTRAVEL FORCE ON PLUNGER EXCEEDING 5 POUNDS

ANSI Y14.5M–1982 APPLIES

THIS DRAWING COVERS A PROPRIETARY ITEM AND IS THE PROPERTY OF MICRO SWITCH, A DIVISION OF HONEYWELL. THIS DRAWING IS NOT TO BE COPIED OR USED WITHOUT THE APPROVAL OF MICRO SWITCH.

THIRD ANGLE PROJECTION

CHARACTERISTICS 1	ELECTRICAL DATA	SCALE FULL — DO NOT SCALE PRINT
OPERATING FORCE — — — 8 GRAMS MAX	CONTACT ARRANGEMENT S P D T	UNLESS OTHERWISE SPECIFIED TOLERANCES ARE
DIFFERENTIAL TRAVEL — — — .029 MAX		ONE PLACE (.0) ±.030
OVERTRAVEL — — — — — — .069 MIN		TWO PLACE (.00) ±.015
RELEASE TRAVEL — — — — — .018 MIN	L163 3A 125, 250, 277 VAC 1/10HP 250 VAC	THREE PLACE (.000) ±.005
		ANGLES ±
		WEIGHT

REPLACES X99627–V7
RELEASE NO. PR–21897
CATALOG LISTING V7–5F17D8–289
PAGE 1 OF 1
ISSUE 1
CHECK
REVISIONS
CHECK
CHECK
CHECK
DRAWN DCS 23 OCT 95
DDM/CAD