# SR4P3-C3

## OPERATING CHARACTERISTICS 1 5

| | |
|---|---|
| OPERATE MAX | 25 GAUSS |
| RELEASE MIN | 5 GAUSS |
| DIFF MIN | 2 GAUSS |

(TEMP RANGE -40°C TO 85°C)

## ABSOLUTE MAXIMUM RATINGS

| | |
|---|---|
| SUPPLY VOLTAGE (Vs) 7 | 3.8 VDC TO 30 VDC |
| VOLTAGE EXTERNALLY APPLIED TO OUTPUT | +30 VOLTS DC MAX WITH SWITCH IN "OFF" CONDITION ONLY<br>-0.5 VOLTS MAX WITH SWITCH IN "OFF" OR "ON" CONDITION |
| OUTPUT CURRENT | 20 mA |
| TEMPERATURE OPERATE AND STORAGE | -40° C TO 85° C |
| MAGNETIC FLUX | NO LIMIT, THE CIRCUIT CANNOT BE DAMAGED BY MAGNETIC OVERDRIVE |

## ELECTRICAL CHARACTERISTICS

| | MIN | TYP | MAX | REMARKS |
|---|---|---|---|---|
| SUPPLY CURRENT 4 | | 6.0 mA | 11.0 mA | Vs = 3.8-30 VOLTS 7 |
| OUTPUT VOLTAGE 5 (OPERATED) | | 0.25 V | 0.4 V | SINKING 20 mA MAX |
| OUTPUT LEAKAGE 5 CURRENT (RELEASED) | | | 10 μA | LEAKAGE INTO SWITCH OUTPUT |
| OUTPUT SWITCHING TIME | | | | |
| RISE TIME 5 | | 0.2 μ SEC | 1.5 μ SEC | 10% TO 90% |
| FALL TIME | | 0.1 μ SEC | 1.5 μ SEC | 90% TO 10% |

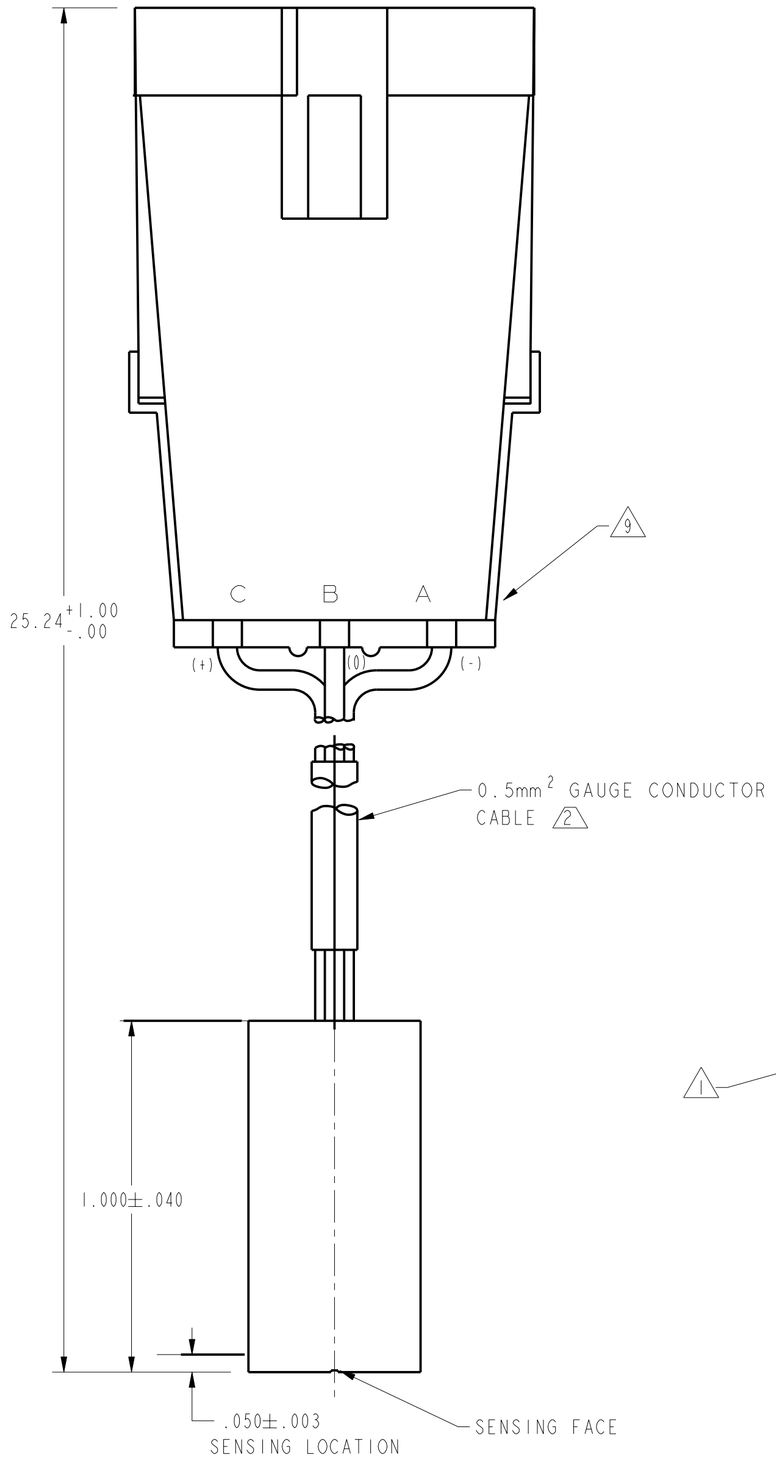


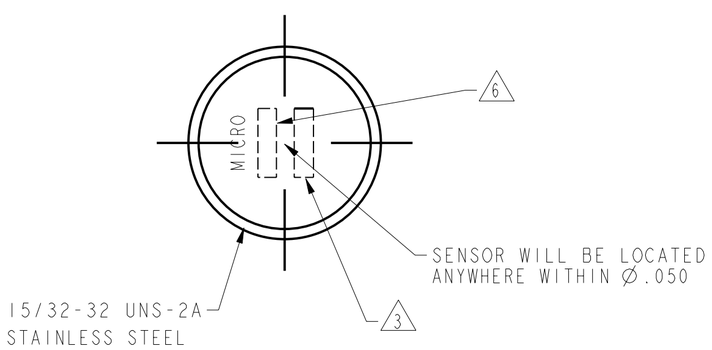


FIG. 1

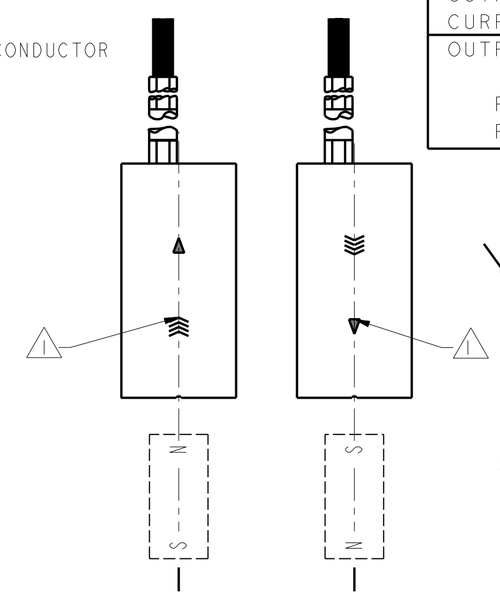


FIG. 2
OPERATE

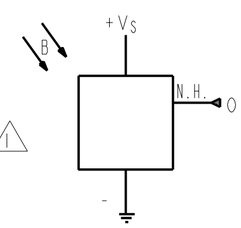


SWITCH SYMBOL

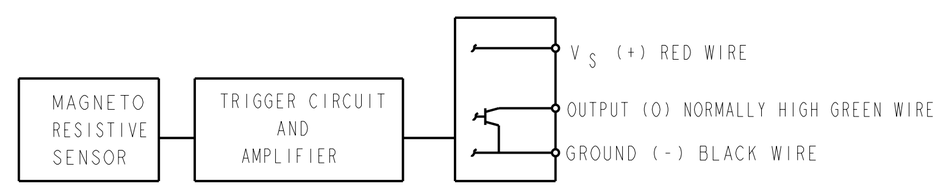


BLOCK DIAGRAM SHOWING CURRENT SINKING OUTPUTS

NOTES

1. FLUX ENTERING THE SOUTH POLE OR THE NORTH POLE OF THE MAGNET WILL OPERATE THE SENSOR WHEN MAGNET IS POSITIONED AS SHOWN IN FIGURE 2. THIS ASSUMES THE CONVENTION THAT THE DIRECTION OF THE EXTERNAL FLUX OF A MAGNET IS FROM THE NORTH TO THE SOUTH POLE OF THE MAGNET.
2. 0.5mm² GUAGE PVC INSULATED CONDUCTORS WITH MOLDED PVC JACKET
3. DATE CODE LOCATED IN THIS AREA
4. SUPPLY CURRENT RATINGS MEASURED AT TEMPERATURES INDICATED "TYP" 24°C±2°C "MAX" -40°C TO 85°C
5. AT SUPPLY VOLTAGE OF 3.8 TO 30 VOLTS AND TEMPERATURE RANGE OF -40 TO 85°C
6. CATALOG LISTING LOCATED IN THIS AREA
7. Vs IS THE UNREGULATED SUPPLY VOLTAGE
8. THE MAGNETIC CHARACTERISTICS OF THE SWITCH MAY BE AFFECTED BY STRAY MAGNETIC FIELDS
9. PACKARD ELECTRIC WEATHER PACK CONNECTOR INCLUDING CONNECTOR HOUSING NO. 12010791
10. SLIGHT ROTATION OF SENSOR MAY BE REQUIRED TO ACHIEVE MAXIMUM SENSITIVITY

THIRD ANGLE PROJECTION

SCALE 3 : 1

DO NOT SCALE PRINT

UNLESS OTHERWISE SPECIFIED TOLERANCES ARE

| | | |
|---|---|---|
| ONE PLACE | (.0) | ±.030 |
| TWO PLACES | (.00) | ±.015 |
| THREE PLACES | (.000) | ±.005 |
| ANGLES | | ± |

WEIGHT

THIS DRAWING COVERS A PROPRIETARY ITEM AND IS THE PROPERTY OF MICRO SWITCH, A DIVISION OF HONEYWELL. THIS DRAWING IS NOT TO BE COPIED OR USED WITHOUT THE APPROVAL OF MICRO SWITCH.

MICRO SWITCH a Honeywell Division
FED. MFG. CODE 91929

MAGNETICALLY OPERATED CYLINDRICAL MAGNETO RESISTIVE SWITCH

CATALOG LISTING
SR4P3-C3

ANSI Y14.5M-1982 APPLIES

SR4P3-C3 | PAGE 1 OF 1 | RELEASE NO PR-24150 | REPLACES
DRAWING NUMBER | ISSUE 1 | CHECK
REVISIONS
CHECK | 19JUL99 | JAF | CHECK | 19JUL99 | 2D
DRAWN KED
PTC/CAD