MICRO SWITCH
A DIVISION OF MINNEAPOLIS-HONEYWELL REGULATOR COMPANY
FREEPORT, ILLINOIS
FED. MFR. CODE 91929

SWITCH—ENCLOSED

CATALOG LISTING
OPD—Q

THIS DRAWING COVERS A PROPRIETARY ITEM AND IS THE PROPERTY OF MICRO SWITCH, A DIVISION OF HONEYWELL. THIS DRAWING IS NOT TO BE COPIED OR USED WITHOUT THE APPROVAL OF MICRO SWITCH.

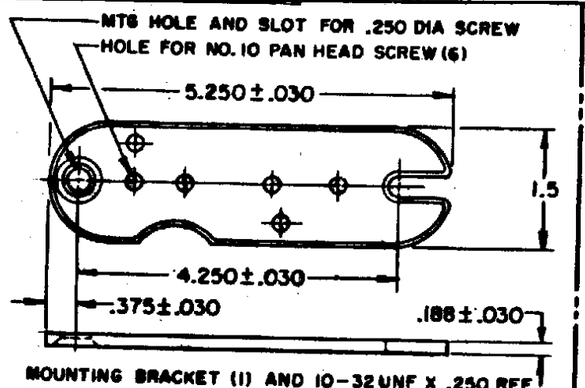

MOUNTING BRACKET (1) AND 10-32 UNF X .250 REF PAN HEAD SCREW (2) FURNISHED UNASSEMBLED
SCALE—HALF SIZE

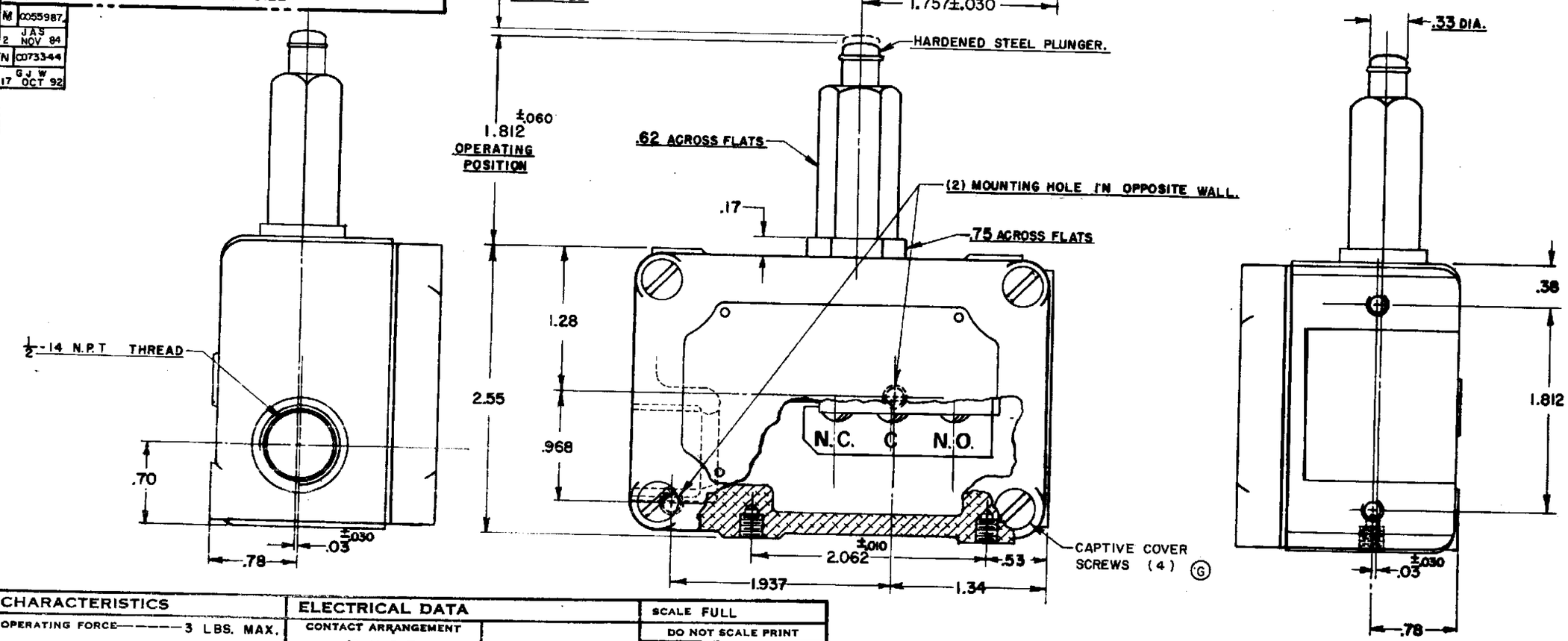

M	C055987
2	JAS NOV 84
N	C073344
17	GJW OCT 92

REVISIONS	
A	C09182
	R. G. C. 18, AUG. 55
B	C013350
	M.B.F. 16 JAN 59
C	C013827
	L.S.D. 16 JULY 59
D	C015608
	MBF 10 FEB 61
E	C016138
	LSD 23 AUG 61
F	C018276
	RJW 22 JUNE 64
G	C019878
	WEG 15 APR 67
H	C026103
	DLF 21 JUL 69
J	C028628
	RER 24 FEB 71
K	CO 53779A
	SLB 30 AUG 83
L	0018962
	VKR 14FEB06

(M) OPD-Q	ISSUE 5
REPLACES	
RELEASE NO.	
DRAWING NUMBER	M
ISSUE	19
CHECK	BP 14FEB06
CHECK	A.C.G. 7 SEPT. 55
CHECK	G.C.H. 12 SEPT. 55
CHECK	
DRAWN	R. G. C. 18, AUG. 55
74-963	

CHARACTERISTICS

OPERATING FORCE——3 LBS. MAX.
RELEASE FORCE——1/2 LB. MIN.
DIFFERENTIAL TRAVEL——.060 MAX. (E)
OVERTRAVEL——.141 MIN.

BASIC SWITCH REPLACEMENT—DT-2R3-A7

ELECTRICAL DATA

CONTACT ARRANGEMENT
D. P. D. T.

-L59- 10 A-125. OR 250 VAC
0.3 A-125 VDC ; 0.15 A-250 VDC
(B)

SCALE FULL
DO NOT SCALE PRINT
UNLESS OTHERWISE SPECIFIED
DIMENSIONS ARE IN INCHES
TOLERANCES ARE:

ONE PLACE	(.0)	±.030
TWO PLACE	(.00)	±.015
THREE PLACE	(.000)	±.005
ANGLES		±

WEIGHT

NOTE—
1-(8) MOUNTING SCREW HOLE, 10-32 NF-2B THREAD X .219 REF DEEP.
2-4-40NC X .125 REF ROUND HEAD TERMINAL SCREWS AND LOCKWASHERS.
3-PLUNGER ASSEMBLY IS UNSEALED