MICRO SWITCH
FREEPORT ILLINOIS U S A
A DIVISION OF HONEYWELL
FED. MFG. CODE 91929

SWITCH – ENCLOSED

CATALOG LISTING
BZE6 – RN

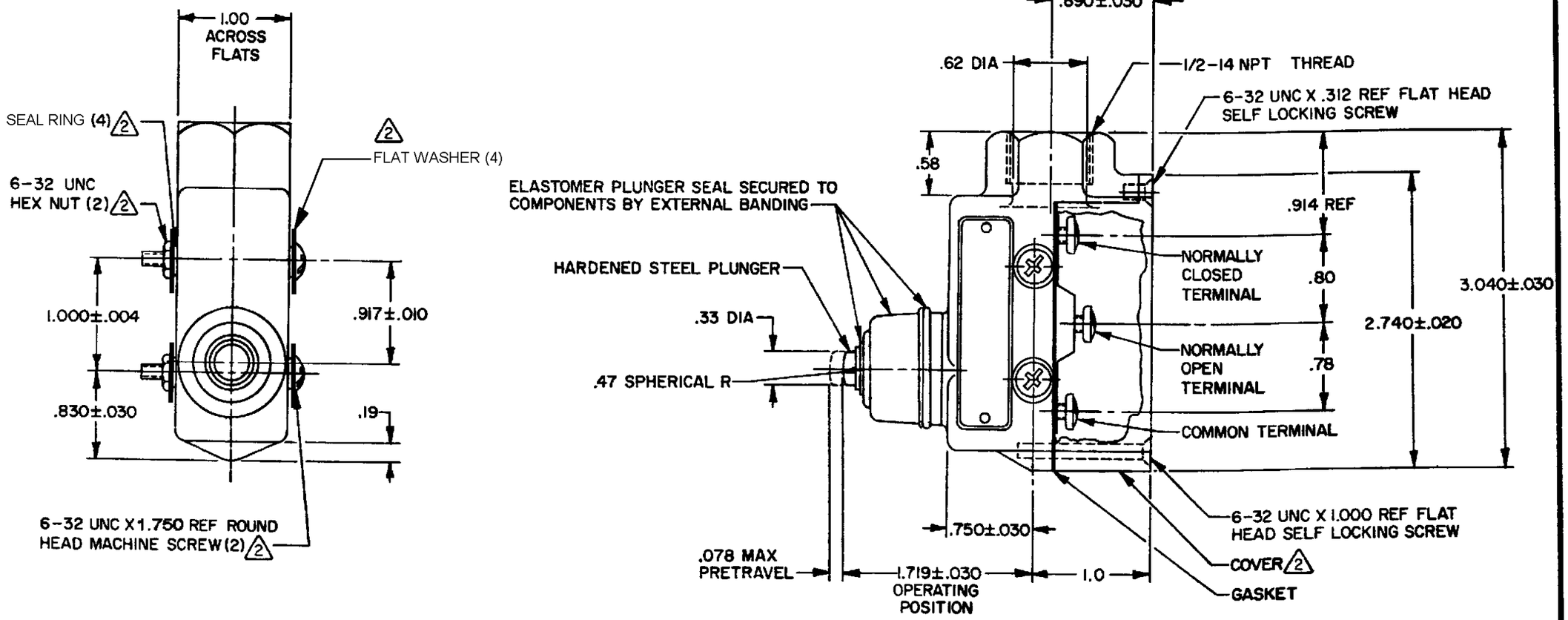

NOTES –

1 – 6-32 UNC X .219 REF BINDING HEAD TERMINAL SCREW AND CUPWASHER (3) FURNISHED UNASSEMBLED
2
3 - SEAL RATING NEMA1 3 4
IP66

THIS DRAWING COVERS A PROPRIETARY ITEM AND IS THE PROPERTY OF MICRO SWITCH, A DIVISION OF HONEYWELL THIS DRAWING IS NOT TO BE COPIED OR USED WITHOUT THE APPROVAL OF MICRO SWITCH.

CHARACTERISTICS	ELECTRICAL DATA	
OPERATING FORCE – – – – – – – 6-20 OZ	CONTACT ARRANGEMENT S P D T	SCALE FULL DO NOT SCALE PRINT
RELEASE FORCE – – – – – – – – 4 OZ MIN	CODE L103 15A-125, 250 OR 480 VAC 1/8 HP-125 VAC; 1/4 HP-250 VAC	UNLESS OTHERWISE NOTED DIMENSIONS ARE IN INCHES
DIFFERENTIAL TRAVEL – – – – – .0005 MAX		TOLERANCES ARE: ONE PLACE (.0) ±.030 TWO PLACE (.00) ±.015 THREE PLACE (.000) ±.005 ANGLES ±1°
OVERTRAVEL – – – – – – – – – – .219 MIN		
BASIC SWITCH REPLACEMENT – – – – BZ-RQ77	CE 1 5A 240Vac	WEIGHT .56 LB

REVISIONS			
A	CO-38200	S L B 24 AUG 77	25 AUG 77
B	C053191-G	CJH 2 MAY 84	R O B
C	C055988	J A P 8 NOV 84	
D	C054958	G J W 8 JAN 85	CHECK
E	C072476	MAM 4 SEP 92	17
F	CO 771/9A	K D R 17 FEB 94	25 AUG
G	0017057	VKR 23NOV05	
H	0023923	RKP 24AUG06	K P K
J	0025947	KML 27OCT06	CHECK
K	0033014	BS 29AUG07	

ISSUE	DRAWING NUMBER	RELEASE NO.	REPLACES
13	M BZE6-RN	29AUG07	

PSR

RASTER FO-9285 1-A
DRAWN S L B 24 AUG 77