FO-55118-B

HONEYWELL PART NUMBER
BZ-R1692
PRODUCT CODE
AGF8826

REV	DOCUMENT	CHANGED BY	CHECK
B	0087958	SBH 30MAR12	CMH

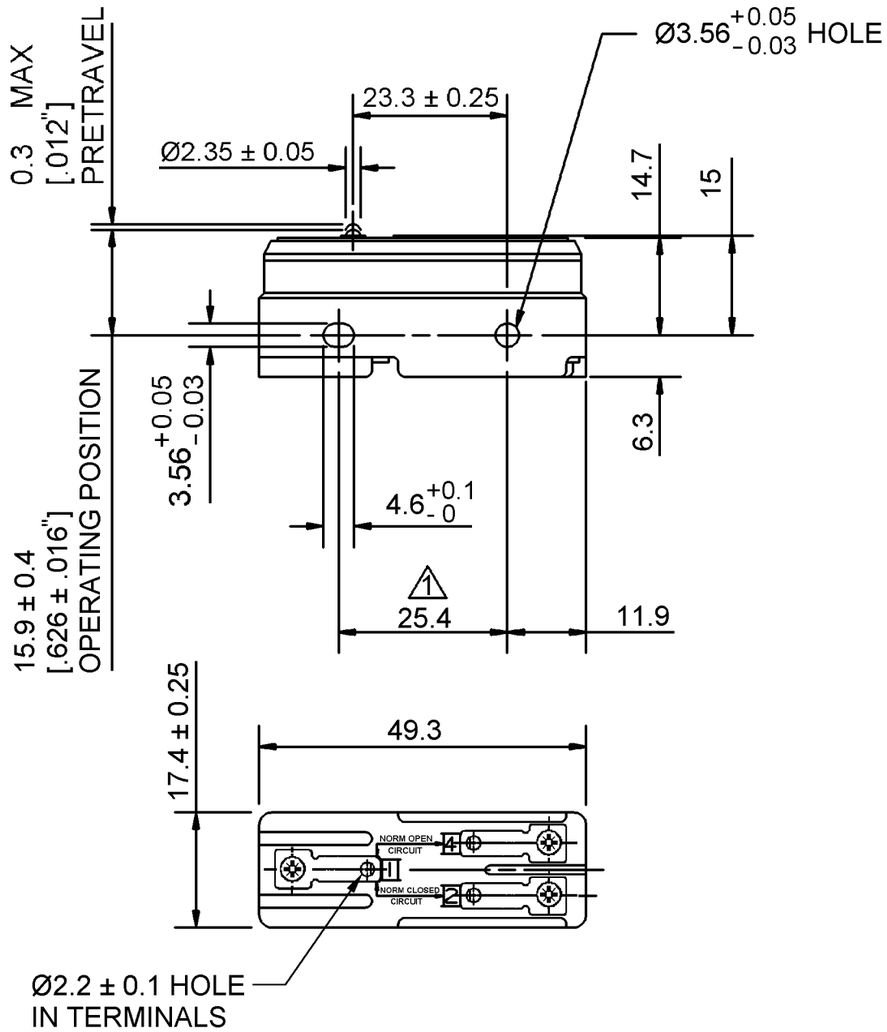

NOTES:

1 - MOUNTING HOLES WILL ACCEPT Ø3.5 MAX PINS OR SCREWS ON 25.4±0.4 CENTRES.

REPLACES: NEWHOUSE BZ-R169

CHARACTERISTICS	
OPERATING FORCE	200 - 260g
DIFFERENTIAL FORCE	
RELEASE FORCE	110g MIN
FREE POSITION	
PRETRAVEL	
DIFFERENTIAL TRAVEL	0.008 - 0.014 [0.00032 - 0.00055"]
OVERTRAVEL	0.13 / [.005"] MIN
FULL TRAVEL FORCE	

ELECTRICAL DATA	
CONTACT ARRANGEMENT S.P.D.T	BREAK DISTANCE
15A 125, 250 OR 480 VAC 1/8 HP 125 VAC, 1/4 HP 250 VAC 1/2A 125 VDC, 1/4A 250 VDC 16A/250 V~T85 5E4 µ	

DESIGN UNITS: MM
TOLERANCES UNLESS NOTED:

NO PLACES	X	±	-
ONE PLACE	.X	±	0.4
TWO PLACE	.XX	±	-
THREE PLACE	.XXX	±	-
ANGLES	X	±	-

THIRD ANGLE PROJECTION

DRAWN	SSK	10NOV09
CHECK	GM	10NOV09

THIS DRAWING COVERS A PROPRIETARY ITEM AND IS THE PROPERTY OF HONEYWELL. THIS DRAWING IS NOT TO BE COPIED OR USED WITHOUT THE PERMISSION OF HONEYWELL.

INTERPRET PER ASME Y14.5M-1994 OTHER HONEYWELL ENGINEERING STANDARDS MAY APPLY

RASTER

Honeywell

TITLE SWITCH - BASIC

SIZE	TYPE	CAGE CODE	DRAWING NAME	REV
A3	I	–	BZ-R1692	B

SCALE NONE

SHEET 1 OF 1