MICRO SWITCH
FREEPORT, ILLINOIS, U.S.A.
A DIVISION OF HONEYWELL
FED. MFG. CODE 91929

SWITCH-BASIC

CATALOG LISTING
BZ-2RQ233-A2

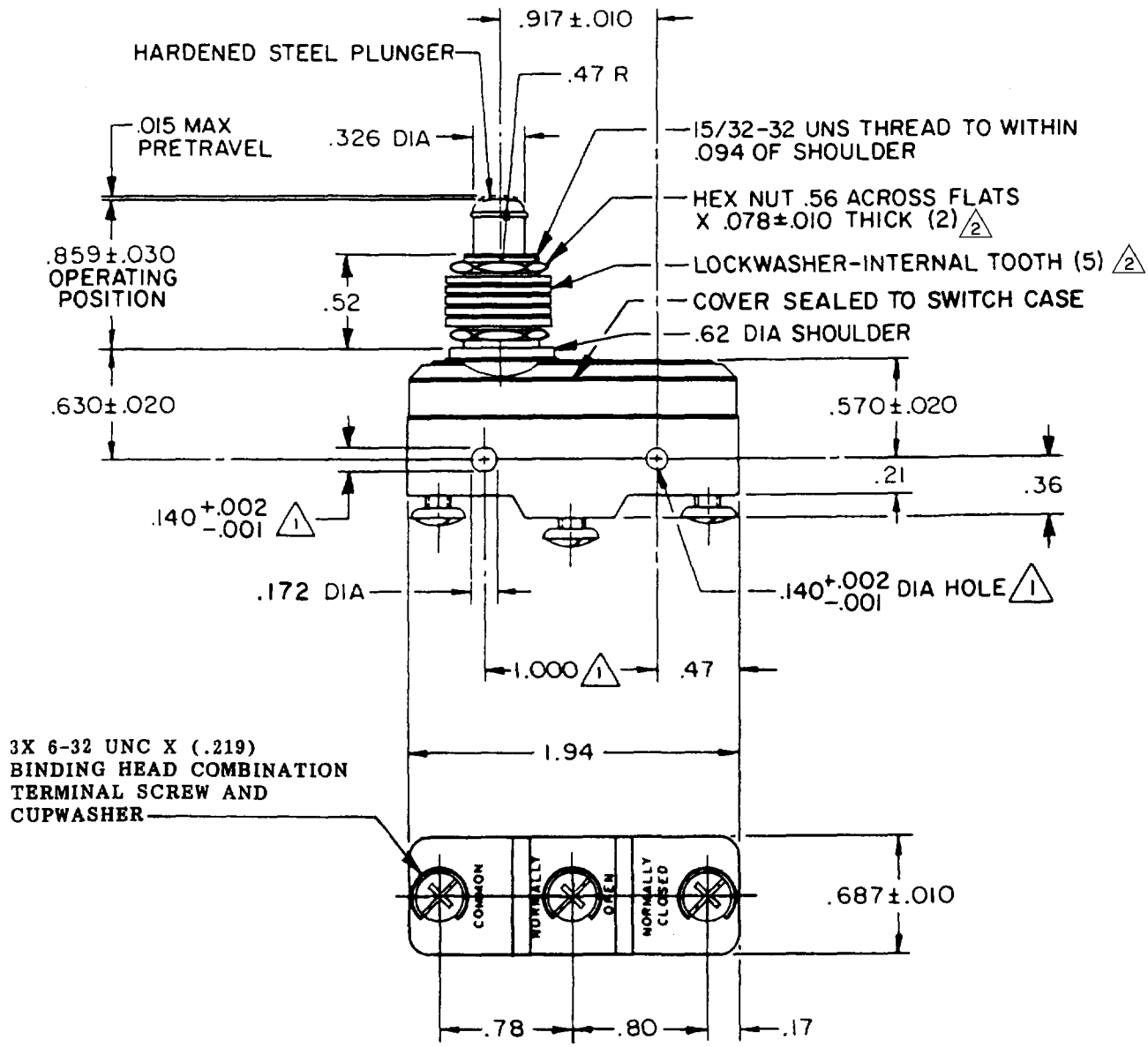

NOTES
1. MOUNTING HOLES WILL ACCEPT PINS OR SCREWS OF .139 MAX DIA ON 1.000±.002 CENTERS
2. HARDWARE FURNISHED UNASSEMBLED

THIS DRAWING COVERS A PROPRIETARY ITEM AND IS THE PROPERTY OF MICRO SWITCH, A DIVISION OF MINNEAPOLIS-HONEYWELL REGULATOR CO. THIS DRAWING IS NOT TO BE COPIED OR USED WITHOUT THE APPROVAL OF MICRO SWITCH.

CHARACTERISTICS

OPERATING FORCE ---------- 9 - 13 OZ

RELEASE FORCE ---------- 4 OZ MIN

DIFFERENTIAL TRAVEL ----- .0004 - .0020

OVERTRAVEL ---------- .219 MIN

ELECTRICAL DATA

CONTACT ARRANGEMENT
S P D T

L96 — 15A 125, 250 OR 480 VAC
1/8 HP 125 VAC, 1/4 HP 250 VAC
1/2A 125 VDC, 1/4A 250 VDC

L288
L299
L306 — 16A 250V ~ T85 5E4

SCALE FULL
DO NOT SCALE PRINT

UNLESS OTHERWISE NOTED
DIMENSIONS ARE IN INCHES
TOLERANCES ARE:

ONE PLACE	(.0)	±.030
TWO PLACE	(.00)	±.015
THREE PLACE	(.000)	±.005
ANGLES		±

WEIGHT .094 LB

BZ-2RQ233-A2
PAGE 1 OF 1
M
DRAWING NUMBER
6
ISSUE
REPLACES X92130-BZ
RELEASE NO. PR-18241
CHECK

REVISIONS

A	CO68526	JAP 28 SEP 90
B	CO-73287-J	JAL 22 NOV 93
C	CO-77589	JAL 30 MAR 94
D	CO-82133	CSL 2 AUG 96
E	CO93346	DLT 11 SEP 98

DRAWN A B 10 MAY 90 CHECK 12 MAY 90 JAP CHECK

FORMTEK