**MICRO SWITCH**
FREEPORT ILLINOIS, U.S.A
A DIVISION OF HONEYWELL
FED. MFG. CODE 91929

# SWITCH-BASIC

CATALOG LISTING
**BM-2R559729-A4**

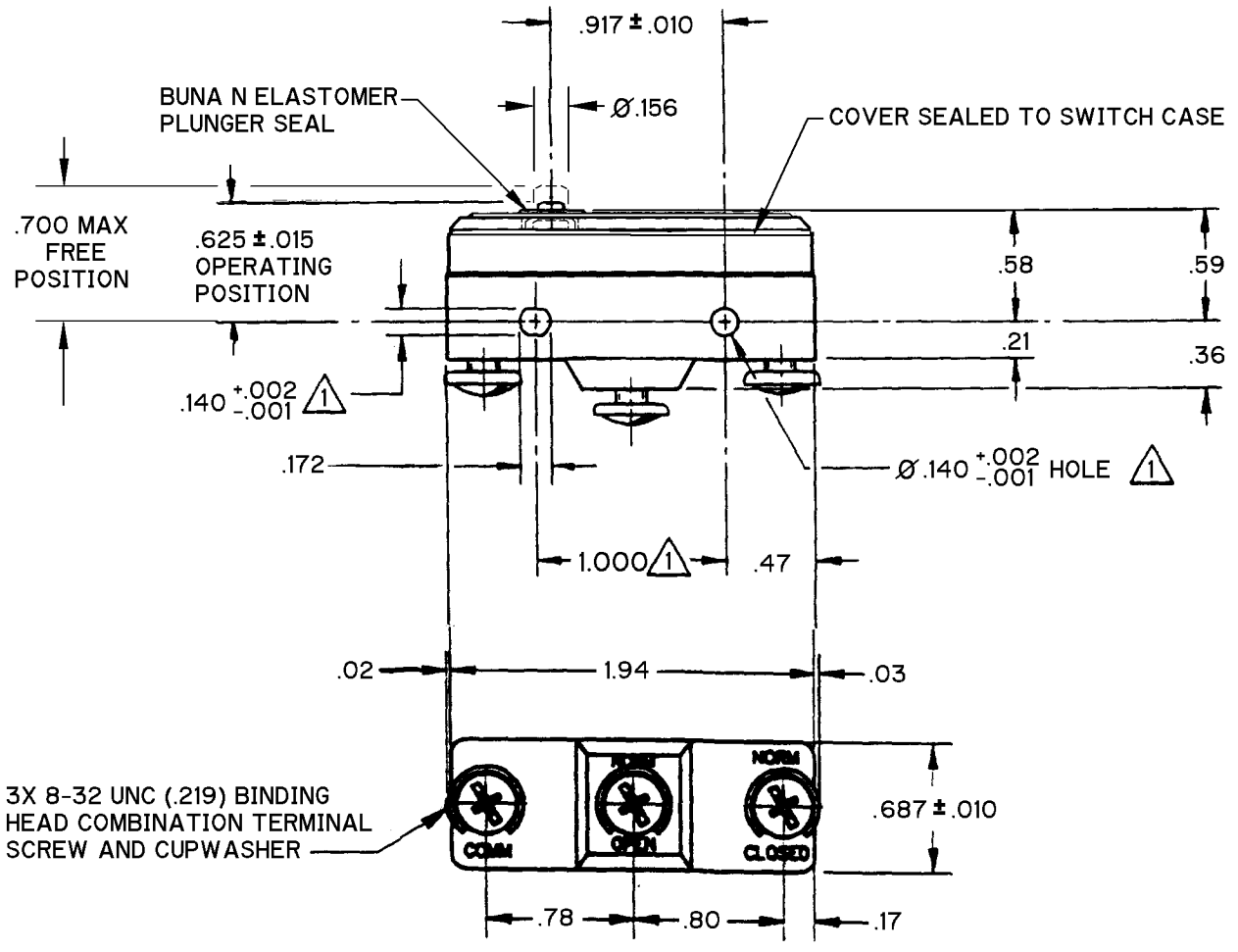


NOTE
1 MOUNTING HOLES WILL ACCEPT PINS OR SCREWS OF Ø.139 MAX ON 1.000±.002 CENTERS

ANSI Y14.5M-1982 APPLIES

THIS DRAWING COVERS A PROPRIETARY ITEM AND IS THE PROPERTY OF MICRO SWITCH. A DIVISION OF HONEYWELL. THIS DRAWING IS NOT TO BE COPIED OR USED WITHOUT THE APPROVAL OF MICRO SWITCH.

THIRD ANGLE PROJECTION

## CHARACTERISTICS

OPERATING FORCE ------ 15 - 25 OZ

RELEASE FORCE-------- 8 OZ MIN

DIFFERENTIAL TRAVEL----.003 MAX

OVERTRAVEL----------.005 MIN

## ELECTRICAL DATA

CONTACT ARRANGEMENT
S P D T

L167

22A 125, 250 OR 277 VAC
3/4 HP 125 VAC. 1 1/2 HP 250 VAC

L288
L315
L318

22A 250V ~ T85 5E4

SCALE FULL

DO NOT SCALE PRINT

TOLERANCES
APPLY TO DESIGN UNITS. CONVERSIONS ARE ONLY FOR REFERENCE. UNLESS NOTED, TOLERANCES ARE ±

| | Dim. mm | Tol. mm/in | Dim. in | Tol. mm/in |
|---|---|---|---|---|
| NO PLACES | X | 1/.04 | | |
| ONE PLACE | X.X | 0.4/.016 | X.X | 0.8/.03 |
| TWO PLACES | X.XX | 0.15/.006 | X.XX | 0.38/.015 |
| THREE PLACES | | | X.XXX | 0.13/.005 |
| ANGLES | | | | |

DESIGN UNITS SI METRIC ☐ US CUSTOMARY ■

WEIGHT .050 LB

X110440-BM
REPLACES PR-23556
RELEASE NO.
CATALOG LISTING BM-2R559729-A4
PAGE 1 OF 1
ISSUE 2 M

REVISIONS
A 0035413 JA 07DEC07

| | | |
|---|---|---|
| CHECK | | |
| | | |
| CHECK | ASD | 07DEC07 |
| CHECK | | |
| | | 1 JUL 98 |
| CHECK | J A F | |
| CHECK | | 30 JUN 98 |
| DRAWN | J A S | |

RASTER