MICRO SWITCH
FREEPORT ILLINOIS, U.S.A
A DIVISION OF HONEYWELL
FED. MFG. CODE 91929

SMALL PRECISION LIMIT SWITCH

914CE19-6

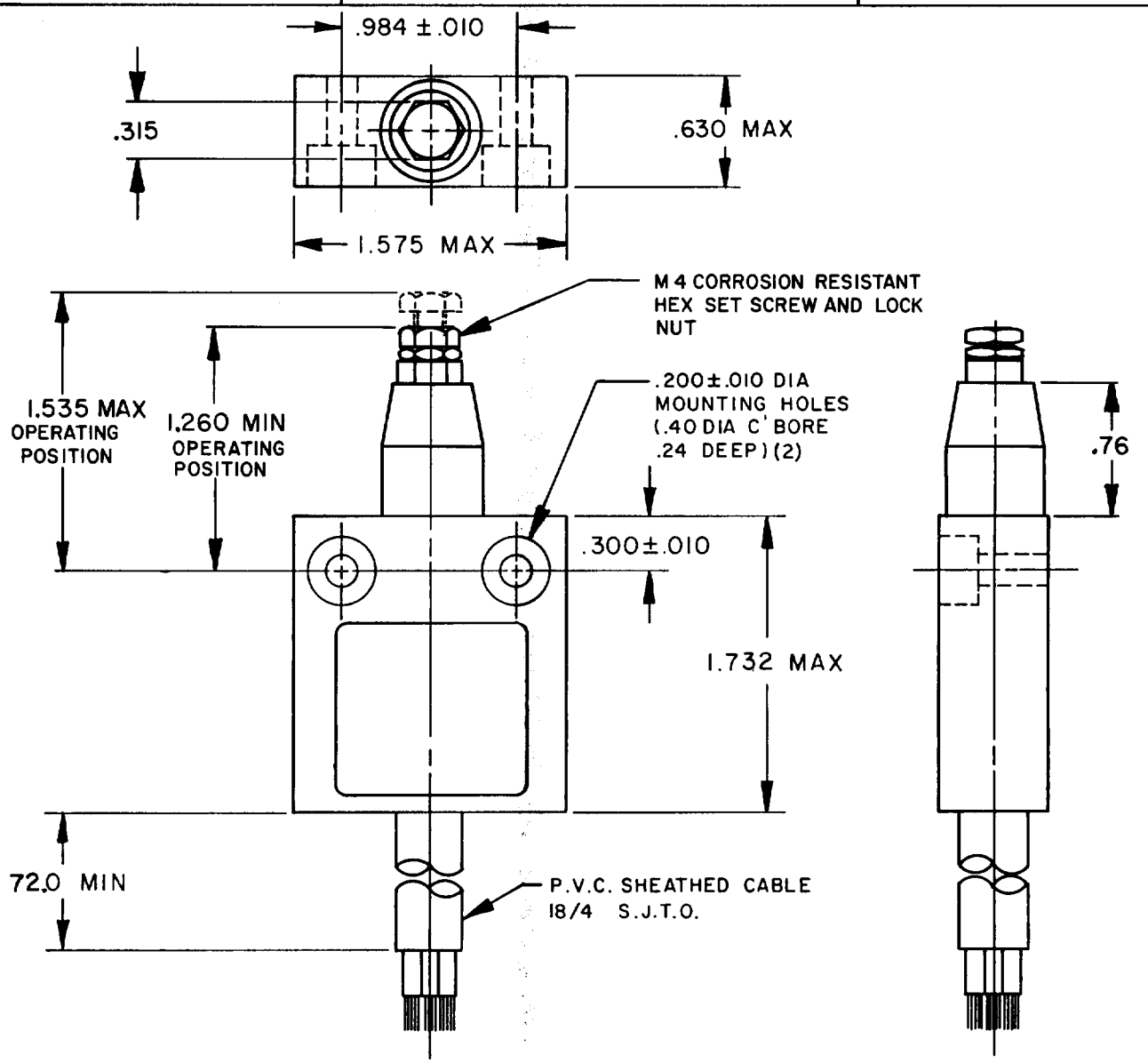

NOTE –

1 - ZINC HOUSING FINISHED WITH GREY PAINT

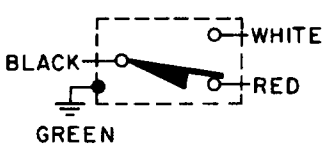

CIRCUIT DIAGRAM

THIS DRAWING COVERS A PROPRIETARY ITEM AND IS THE PROPERTY OF MICRO SWITCH, A DIVISION OF HONEYWELL. THIS DRAWING IS NOT TO BE COPIED OR USED WITHOUT THE APPROVAL OF MICRO SWITCH.

THIRD ANGLE PROJECTION

CHARACTERISTICS

OPERATING FORCE — — — — 5 LB MAX

DIFFERENTIAL TRAVEL — — —.004 MAX

OVERTRAVEL — — — — — — —.118 MIN

ELECTRICAL DATA

CONTACT ARRANGEMENT
S P D T

5A - 250 VAC
1/10 HP - 125 OR 250 VAC

SCALE FULL

DO NOT SCALE PRINT

TOLERANCES
APPLY TO DESIGN UNITS. CONVERSIONS ARE ONLY FOR REFERENCE. UNLESS NOTED, TOLERANCES ARE ±

	DIM. mm	TOL. mm/in	DIM. in	TOL. mm/in
NO PLACES	X	1/04		
ONE PLACE	X.X	0.4/.016	X.X	0.8/.03
TWO PLACES	X.XX	0.15/.006	X.XX	0.38/.015
THREE PLACES			X.XXX	0.13/.005
ANGLES				

SI METRIC ☐ US CUSTOMARY ■

DESIGN UNITS

WEIGHT

914CE19-6 | M | DRAWING NUMBER | ISSUE 3 | RELEASE NO. PR-7324 | REPLACES

REVISIONS
A CO 51267 TSK 6 APR 82
A CO 51367 TSK 6 APR 82
B C069061 LJF 15 AUG 91

D J S 15 AUG 78 DRAWN | CHECK | C E B 9 SEPT 78 CHECK | CHECK

FO-52848-A