MICRO SWITCH
FREEPORT, ILLINOIS. U. S. A.
A DIVISION OF HONEYWELL

FED. MFG. CODE 91929

SWITCH–ENCLOSED

CATALOG LISTING
602HE1–6

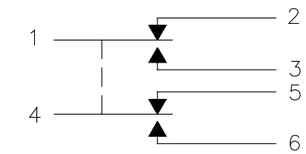

CIRCUIT DIAGRAM

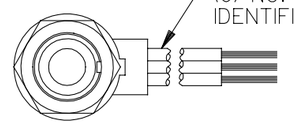

(6) NO. 20 WIRE LEAD PER MIL–W–22759/7 MARKED WITH CIRCUIT IDENTIFICATION AND WIRE GAGE (1–20, 2–20, ETC) PER MIL–W–5088

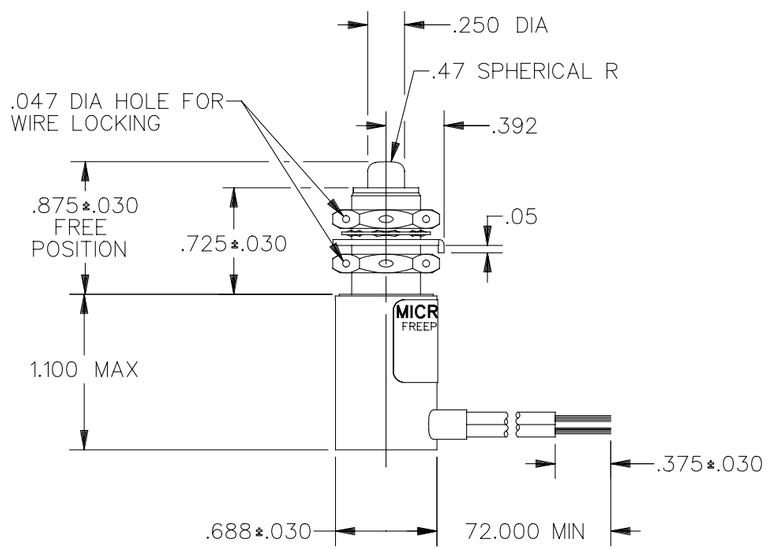

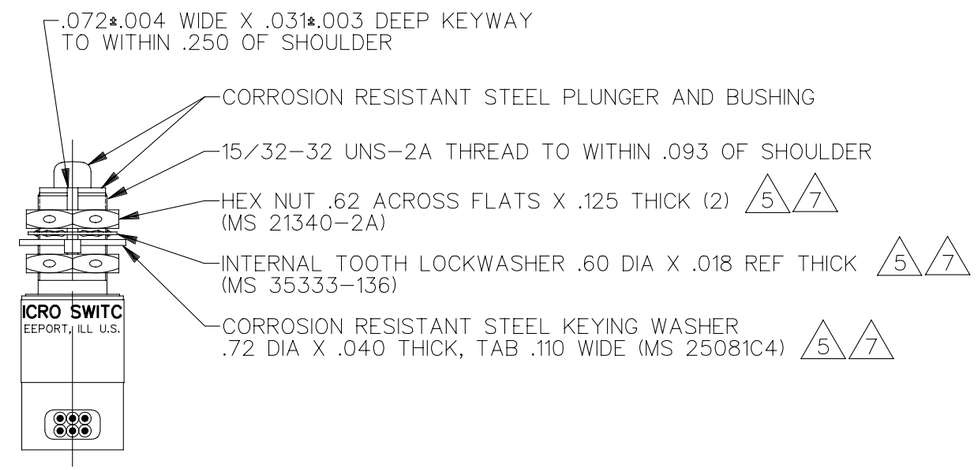

DDM/CAD

THIS DRAWING COVERS A PROPERIETARY ITEM AND IS THE PROPERTY OF MICRO SWITCH. A DIVISION OF HONEYWELL. THIS DRAWING IS NOT TO BE COPIED OR USED WITHOUT THE APPROVAL OF MICRO SWITCH

CHARACTERISTICS

OPERATING FORCE	5 –12 LB
FULL OVERTRAVEL FORCE	30 LB MAX
RELEASE FORCE	3 LB MIN
PRETRAVEL	.040 MAX
DIFFERENTIAL TRAVEL	.020 MAX
OVERTRAVEL	.125 MIN

ELECTRICAL DATA

CONTACT ARRANGEMENT
S P D T (2)

LOAD	28 VDC
	SEA LEVEL & 50,000 FT.
RES	7
IND	4
MOTOR	4

SCALE FULL

DO NOT SCALE PRINT

TOLERANCES
APPLY TO DESIGN UNITS. CONVERSIONS ARE ONLY FOR REFERENCE. UNLESS NOTED, TOLERANCES ARE ±

	DIM. mm	TOL. mm/in	DIM. in	TOL. mm/in
NO PLACES	X	1/.04		
ONE PLACE	X.X	0.4/.016	X.X	0.8/.03
TWO PLACES	X.XX	0.15/.006	X.XX	0.38/.015
THREE PLACES			X.XXX	0.13/.005
ANGLES				

DESIGN UNITS SI METRIC ☐ US CUSTOMARY ☒

THIRD ANGLE PROJECTION

WEIGHT

NOTES
1 – CORROSION RESISTANT STEEL ENCLOSURE
2 – SWITCH SEALED PER MIL–S–8805 SYMBOL 5
3 – COINCIDENCE OF OPERATING AND RELEASING POINTS: .010 INCH OF PLUNGER TRAVEL
4 – CIRCUIT DIAGRAM, AND CATALOG LISTING SHOWN ON NAMEPLATE
5 REPLACEMENT MOUNTING HARDWARE – PACKET 19PA9
6 – FOR OPERATION IN TEMPERATURE OF MINUS 65°F TO PLUS 257°F
7 HARDWARE MAY BE PACKAGED UNASSEMBLED PER MIL–S–8805

DRAWING NUMBER M 602HE1–6
ISSUE 3
REPLACES
RELEASE NO. PR–15350–T
CHECK
REVISIONS
A PR15350T MAM 5 FEB 87
CHECK
CHECK
CHECK
DRAWN MAM 5 FEB 87