MICRO SWITCH
FREEPORT ILLINOIS, U S A
A DIVISION OF HONEYWELL
FED. MFG CODE 81929

SWITCH-ENCLOSED

CATALOG LISTING
602EN1-6
MILITARY STDS PART NO.
MS 27240-1

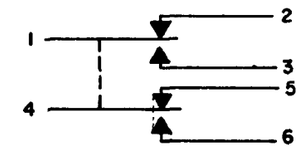

CIRCUIT DIAGRAM

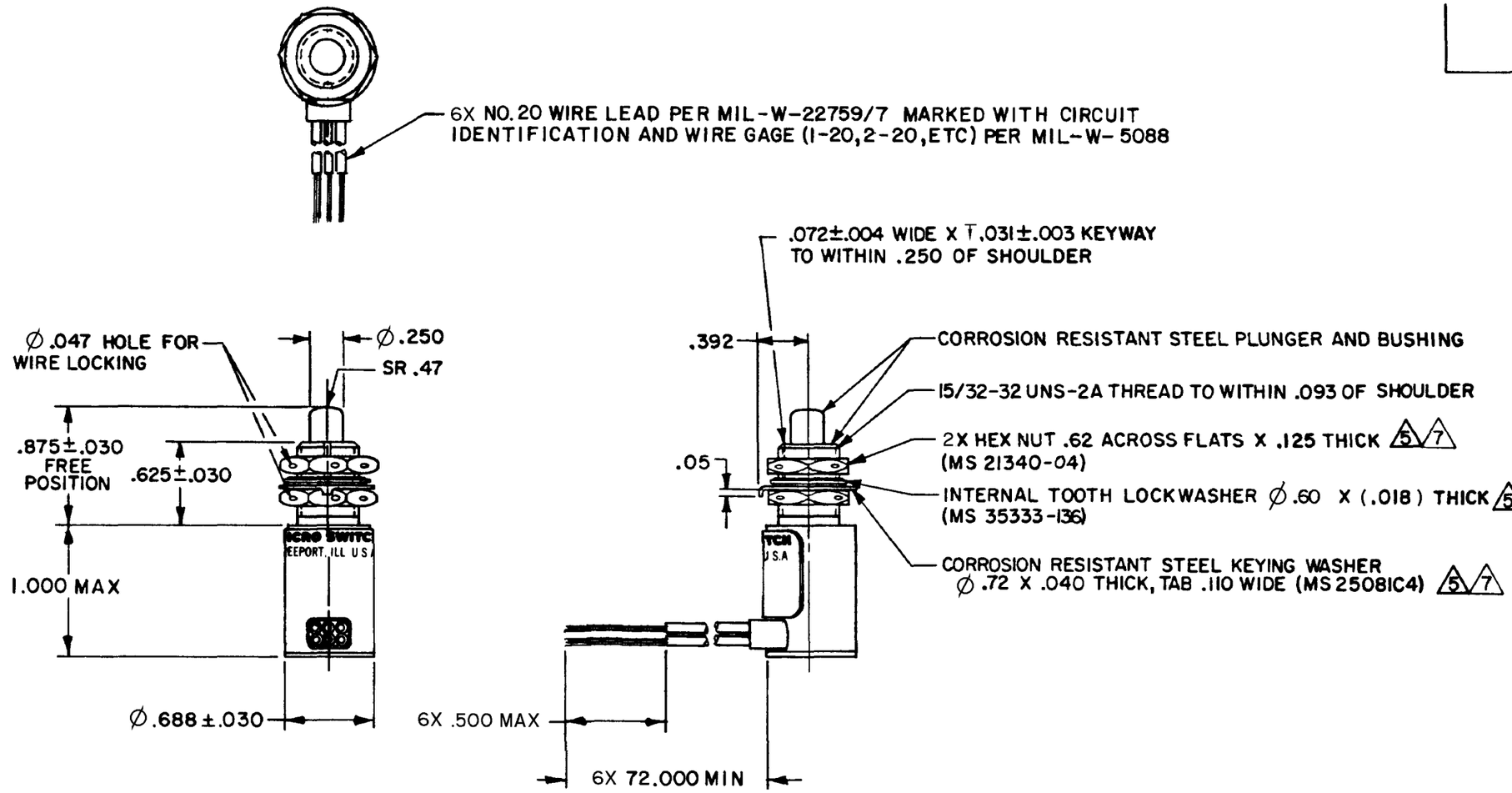

ANSI Y14.5M-1982 APPLIES

NOTES
1 - CORROSION RESISTANT STEEL ENCLOSURE
2 - SWITCH SEALED PER MIL-S-8805 SYMBOL 4
3 - COINCIDENCE OF OPERATING AND RELEASING POINTS: .010 INCH OF PLUNGER TRAVEL
4 - CIRCUIT DIAGRAM, CATALOG LISTING, DATE CODE, FED. MFG. CODE AND MILITARY STANDARDS PART NO. MS27240-1 ARE SHOWN ON NAMEPLATE
5 - REPLACEMENT MOUNTING HARDWARE - PACKET 19PA9
6 - APPLICATION INFORMATION ONLY
7 - HARDWARE MAY BE PACKAGED UNASSEMBLED PER MIL-S-8805

THIS DRAWING COVERS A PROPRIETARY ITEM AND IS THE PROPERTY OF MICRO SWITCH, A DIVISION OF HONEYWELL. THIS DRAWING IS NOT TO BE COPIED OR USED WITHOUT THE APPROVAL OF MICRO SWITCH.

THIRD ANGLE PROJECTION

SCALE FULL
DO NOT SCALE PRINT

CHARACTERISTICS

OPERATING FORCE	6-12 LB
FULL OVERTRAVEL FORCE	30 LB MAX
RELEASE FORCE	4 LB MIN
PRETRAVEL	.040 MAX
DIFFERENTIAL TRAVEL	.020 MAX
OVERTRAVEL	.125 MIN

ELECTRICAL DATA

CONTACT ARRANGEMENT
2X S P D T

LOAD	28 VDC SEA LEVEL	28 VDC 50,000 FT.
RES	7	7
IND	4	2.5
MOTOR	4	4 6

TOLERANCES
APPLY TO DESIGN UNITS CONVERSIONS ARE ONLY FOR REFERENCE UNLESS NOTED TOLERANCES ARE ±

	DIM. mm	TOL. mm/in	DIM. in	TOL. mm/in
NO PLACES	X	1/04		
ONE PLACE	X.X	0.4/.016	X X	0.8/.03
TWO PLACES	X.XX	0.15/.006	X XX	0.38/.015
THREE PLACES			X XXX	0.13/.005
ANGLES				

DESIGN UNITS SI METRIC ☐ US CUSTOMARY ■

RAW MATERIAL-COMMERCIAL STANDARD
MICRO SWITCH STANDARDS APPLY
DIMENSIONS ARE TO BE MET BEFORE PROTECTIVE COATINGS ARE APPLIED

WEIGHT .50 LB

602EN1-6
PAGE 1 OF 1
M
DRAWING NUMBER
ISSUE 21
RELEASE NO. SR-9830
REPLACES
CHECK
REVISIONS
A NEW DWG C044635 TRF 13 NOV 78
B C047573 JAP 7 AUG 80
C C049806 DJW 25 SEPT 81
D C057370 JAP 14 MAY 85
E CO-83923A GLH 21 MAY 97
F CO-94050 MPO JAN 12 99
12 JAN 99 JAF
27 NOV 78 GLH
13 NOV 78 TRF
DRAWN
FO-52851-A