MICRO SWITCH
a Honeywell Division
FED.MFG.CODE 91929

SWITCH - BASIC

CATALOG LISTING
V7-1B17D8-122-1
CW-B2035

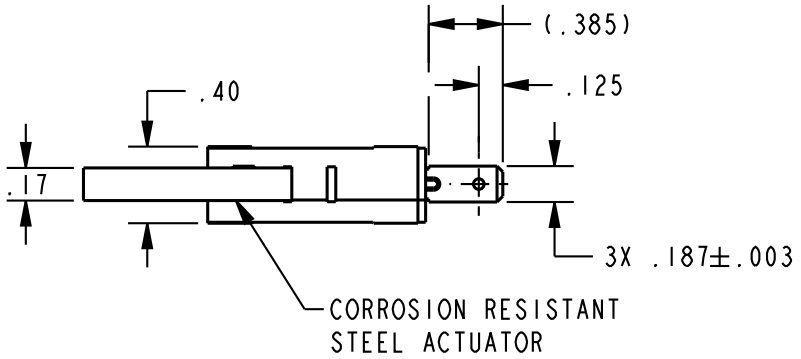

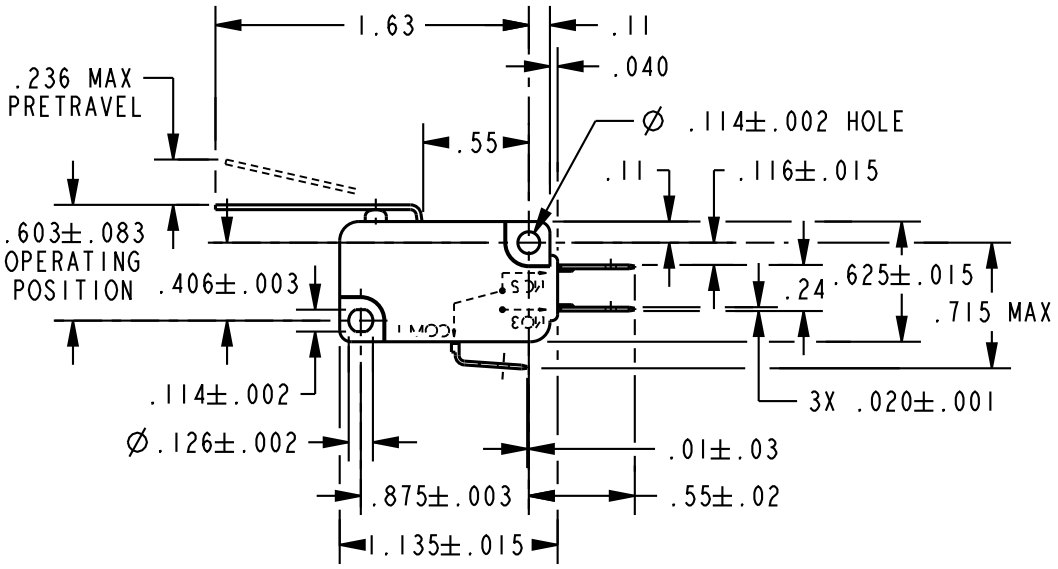

NOTES
1 - TERMINALS AND INTERNAL COMPONENTS ARE SILVER PLATED

ANSI Y14.5M-1982 APPLIES

THIS DRAWING COVERS A PROPRIETARY ITEM AND IS THE PROPERTY OF MICRO SWITCH, A DIVISION OF HONEYWELL. THIS DRAWING IS NOT TO BE COPIED OR USED WITHOUT THE APPROVAL OF MICRO SWITCH.

THIRD ANGLE PROJECTION

CHARACTERISTICS	ELECTRICAL DATA	SCALE NONE — DO NOT SCALE PRINT
OPERATING FORCE ----------43 GRAMS MAX	CONTACT ARRANGEMENT S P D T	UNLESS OTHERWISE SPECIFIED TOLERANCES ARE
RELEASE FORCE ----------4 GRAMS MIN		ONE PLACE (.0) ±.030
DIFFERENTIAL TRAVEL ----------.053 MAX	L156 11A 1/3HP 125, 250 OR 277 VAC 1/2A 125 VDC, 1/4A 250 VDC 4A 125 VAC "L"	TWO PLACE (.00) ±.015
OVERTRAVEL ----------.118 MIN		THREE PLACE (.000) ±.005
RELEASE TRAVEL ----------.032 MIN		ANGLES ±
		WEIGHT

REVISIONS

A	203258	GRT 25 JUN 01	
B	0085964	SBH 27JAN12	

REPLACES	X110769-V7		
RELEASE NO.	PR-23448		
CHECK		27JAN12	
CMH			
CHECK		25 JUN 01	
SAV			
CHECK		25 JUN 01	
DRAWN	GRT	25 JUN 01	

CATALOG LISTING V7-1B17D8-122-1
PAGE 1 OF 1
ISSUE 3
PTC/CAD 2D