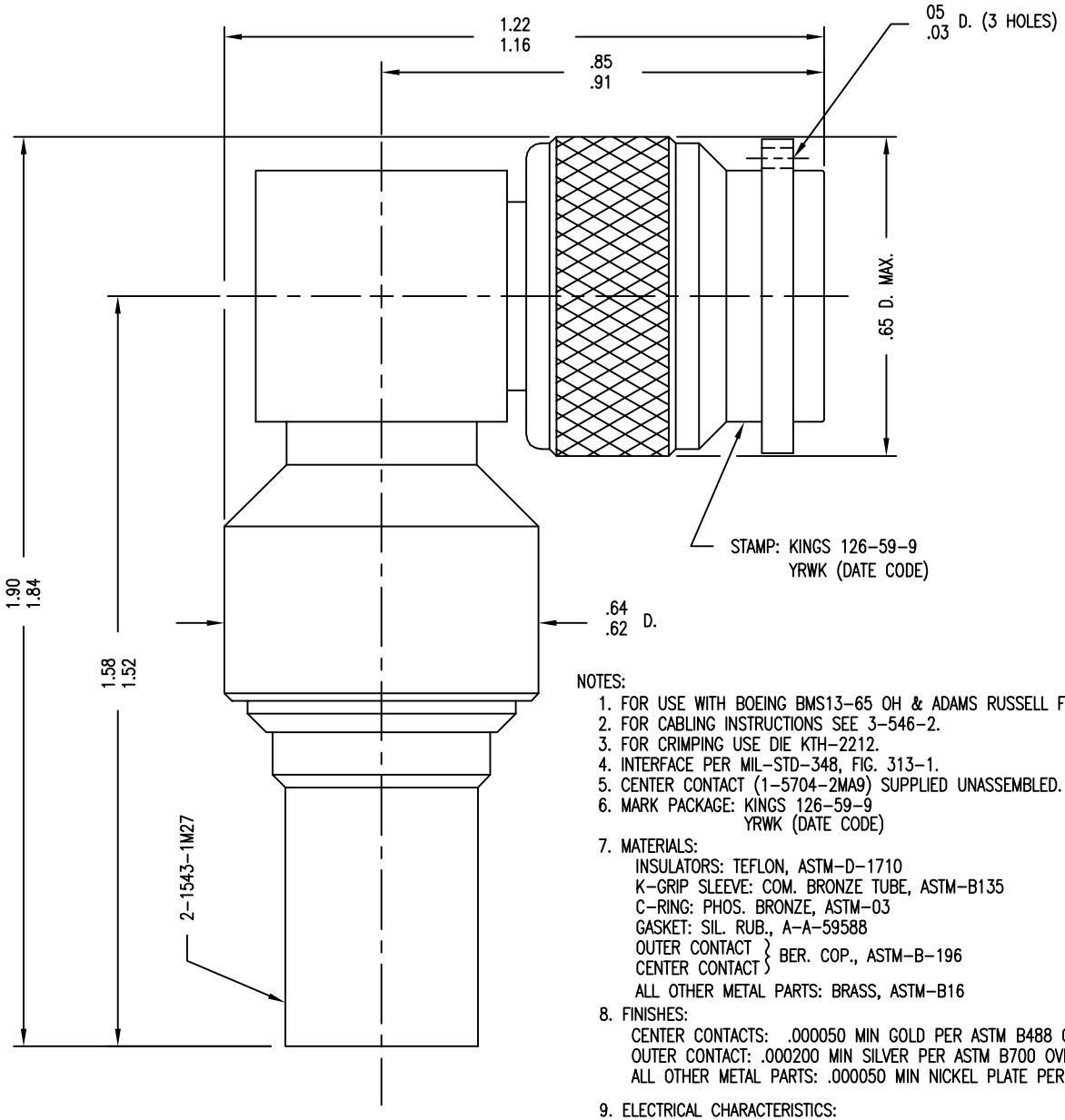

NOTES:

1. FOR USE WITH BOEING BMS13-65 OH & ADAMS RUSSELL FC28Z CABLE.
2. FOR CABLING INSTRUCTIONS SEE 3-546-2.
3. FOR CRIMPING USE DIE KTH-2212.
4. INTERFACE PER MIL-STD-348, FIG. 313-1.
5. CENTER CONTACT (1-5704-2MA9) SUPPLIED UNASSEMBLED.
6. MARK PACKAGE: KINGS 126-59-9
   YRWK (DATE CODE)
7. MATERIALS:
   INSULATORS: TEFLON, ASTM-D-1710
   K-GRIP SLEEVE: COM. BRONZE TUBE, ASTM-B135
   C-RING: PHOS. BRONZE, ASTM-03
   GASKET: SIL. RUB., A-A-59588
   OUTER CONTACT } BER. COP., ASTM-B-196
   CENTER CONTACT }
   ALL OTHER METAL PARTS: BRASS, ASTM-B16
8. FINISHES:
   CENTER CONTACTS: .000050 MIN GOLD PER ASTM B488 OVER .000050 MIN NICKEL PER AMS-QQ-N-290(RoHS)
   OUTER CONTACT: .000200 MIN SILVER PER ASTM B700 OVER .000020 MIN. COPPER PER ASTM B734(RoHS)
   ALL OTHER METAL PARTS: .000050 MIN NICKEL PLATE PER AMS-QQ-N-290 OVER .000050 MIN COPPER PER ASTM B734(RoHS)
9. ELECTRICAL CHARACTERISTICS:
   NOMINAL IMPEDANCE: 50 OHMS
   VOLTAGE RATING: 500 VRMS
   FREQUENCY RANGE: DC TO 11 GHz.
10. WEIGHT: 51.6 GRAMS(0.114 POUNDS)

126-59-9

REVISIONS

ISSUE	CHANGES
0	ER 34039 KH 08/20/92
1	CN 34112 E JCA 09/14/92
2	CN 34481 C JCA 05/28/93
3	CN 38249 C BDH 03/13/01
Γ	ER 33785 COL 07/14/11

SALES DRAWING

THIS DRAWING, THE DESIGNS AND IDEAS EMBODIED IN THE DEVICE TO WHICH IT RELATES, AND THE METHOD OF PRODUCING THE DEVICE, ARE THE PROPERTY OF WINCHESTER ELECTRONICS CORPORATION AND SHALL NOT BE EMPLOYED, COPIED, OR DISCLOSED TO ANYONE, IN ANY MANNER WITHOUT THE CONSENT OF WINCHESTER ELECTRONICS CORPORATION.

SCALE 4:1

APPROX SURFACE AREA

WAS: E-17519

USED ON

CAGE CODE:91836

PLUG, ANGLE, TNC

DRAWN	KH	DATE	07/20/92
DESIGN	JT	DATE	07/21/92
APPR.		DATE	

KINGS by WINCHESTER ELECTRONICS

Winchester Electronics
62 Barnes Industrial Road North
Wallingford, CT 06492

B SIZE

126-59-9