e-Front runners

FUJI ELECTRIC

Vol. 6

# FUJI ED&C TIMES

## New Products



## Modified Products



## Discontinued Products



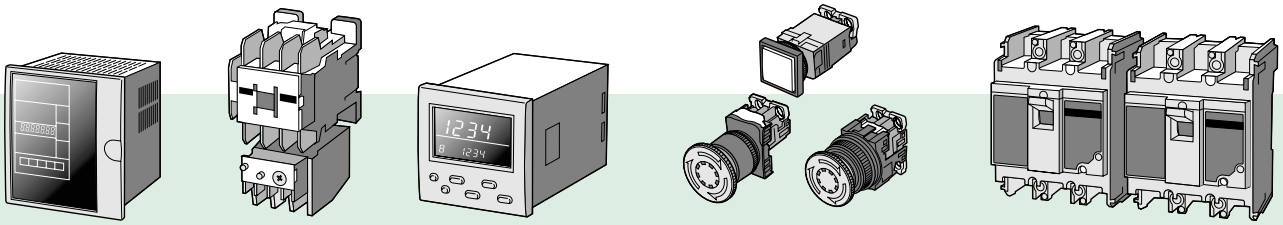

New Products

# Reversing standard type contactors SC-E series

DUO SERIES

## Ideal for reversing 3-phase induction motors

### Features

- Designed for the forward-reverse operation and plugging stop of 3-phase induction motors.
- Mechanical interlock mechanism provided
- Snap-on 35mm top hat rail mounting

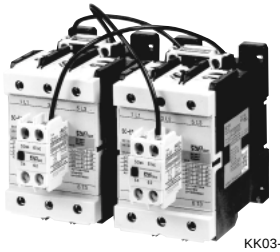

KK03-040

Reversing contactor
**SC-E3RM**

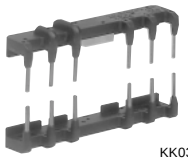

KK03-047

Power connection kits
**SZ-ERW1/A + SZERW1/B**

### Types and ratings

**• AC operated**

| Frame size | Motor rating (kW) 3-phase (AC-3) 200-240V | 380-440V | Rated operational current (A) 3-phase (AC-3) 200-240V | 380-440V | Resistive load (AC-1) 200-240V | 380-440V | Rated thermal current (A) | Auxiliary contact arrangement | Type |
|---|---|---|---|---|---|---|---|---|---|
| E02 | 2.2 | 4 | 9 | 9 | 20 | 20 | 20 | (1NO+1NC) x 2, 2NC x 2<br>(3NO+1NC) x 2, (2NO+2NC) x 2 | **SC-E02RM *** |
| E03 | 3 | 5.5 | 12 | 12 | 20 | 20 | 20 | (1NO+1NC) x 2, 2NC x 2<br>(3NO+1NC) x 2, (2NO+2NC) x 2 | **SC-E03RM *** |
| E04 | 4 | 7.5 | 18 | 18 | 25 | 25 | 25 | (1NO+1NC) x 2, 2NC x 2<br>(3NO+1NC) x 2, (2NO+2NC) x 2 | **SC-E04RM *** |
| E05 | 5.5 | 11 | 25 | 25 | 32 | 32 | 32 | (1NO+1NC) x 2, 2NC x 2<br>(3NO+1NC) x 2, (2NO+2NC) x 2 | **SC-E05RM *** |
| E1 | 7.5 | 15 | 32 | 32 | 50 | 50 | 50 | (1NO+1NC) x 2, 2NC x 2<br>(3NO+1NC) x 2, (2NO+2NC) x 2 | **SC-E1RM *** |
| E2 | 11 | 18.5 | 40 | 40 | 60 | 60 | 60 | (1NO+1NC) x 2, 2NC x 2<br>(3NO+1NC) x 2, (2NO+2NC) x 2 | **SC-E2RM *** |
| E2S | 15 | 22 | 50 | 50 | 65 | 65 | 65 | (1NO+1NC) x 2, 2NC x 2<br>(3NO+1NC) x 2, (2NO+2NC) x 2 | **SC-E2SRM *** |
| E3 | 18.5 | 30 | 68 | 65 | 100 | 100 | 100 | (1NO+1NC) x 2, 2NC x 2<br>(3NO+1NC) x 2, (2NO+2NC) x 2 | **SC-E3RM *** |
| E4 | 22 | 40 | 80 | 80 | 150 | 150 | 150 | (1NO+1NC) x 2, 2NC x 2<br>(3NO+1NC) x 2, (2NO+2NC) x 2 | **SC-E4RM *** |
| E5 | 30 | 55 | 105 | 105 | 150 | 150 | 150 | (2NO+2NC) x 2 | **SC-E5RM** |
| E6 | 37 | 60 | 125 | 125 | 150 | 150 | 150 | (2NO+2NC) x 2 | **SC-E6RM** |
| E7 | 45 | 75 | 150 | 150 | 200 | 200 | 200 | (2NO+2NC) x 2 | **SC-E7RM** |

Notes: • Ratings conform to IEC standard
• The above types are shipped in a set containing two magnetic contactors, one SZ-RM mechanical interlock unit, two front mounting auxiliary contact blocks, and electrical interlock wiring. The power connection kit for the reversing contactor is sold separately.
• To prevent short-circuit faults when using SC-E02RM to SC-E04RM types for high-speed switching, provide a time delay relay or other electrical interlock to ensure that the switching time is 15ms min.
* Equipped with the SZ-A11/T, SZ-A02/T, SZ-A31/T, or SZ-A22/T front mounting auxiliary contact block.

**• DC operated**

DC reversing magnetic contactors are also available.

Further Information *Contact FUJI .*

• **Power connection kits for reversing**

| Power connection kit Type | Used with |
|---|---|
| **SZ-ERW1/A** (Line side)<br>**SZ-ERW1/B** (Load side)<br>**SZ-ERW1/D** (Load side) | SC-E02 to SC-E05<br>SC-E02/G to SC-E05/G |
| **SZ-ERW2/A** (Line side)<br>**SZ-ERW2/B** (Load side)<br>**SZ-ERW2/D** (Load side) | SC-E1 to E2S<br>SC-E1/G to E2S/G |
| **SZ-ERW3/A** (Line side)<br>**SZ-ERW3/B** (Load side)<br>**SZ-ERW3/D** (Load side) | SC-E3, E4<br>SC-E3/G, E4/G |

| Power connection kit Type | Used with |
|---|---|
| **SZ-ERW4/A** (Line side)<br>**SZ-ERW4/B** (Load side) | SC-E5 |
| **SZ-ERW5/A** (Line side)<br>**SZ-ERW5/B** (Load side) | SC-E6 |
| **SZ-ERW6/A** (Line side)<br>**SZ-ERW6/B** (Load side) | SC-E7 |

## Dimensions, mm

• **AC operated**

### SC-E02RM, 03RM, 04RM, 05RM

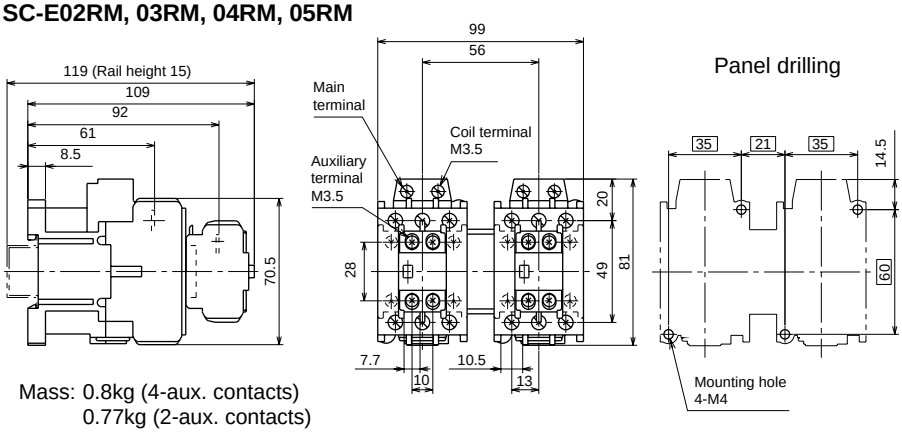


Mass: 0.8kg (4-aux. contacts)
0.77kg (2-aux. contacts)

### SC-E1RM, E2RM, E2SRM

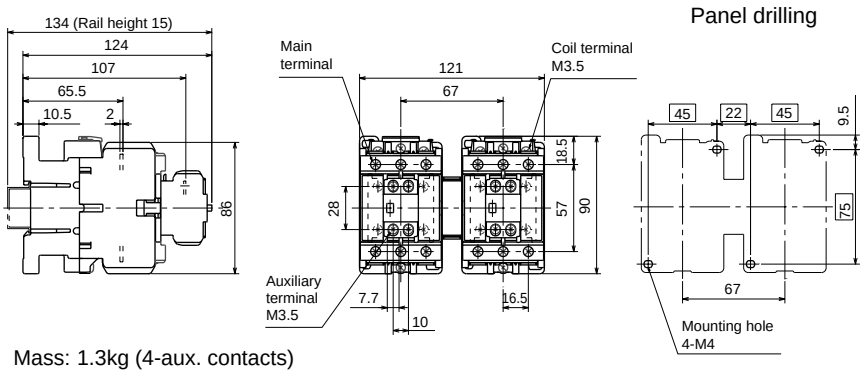


Mass: 1.3kg (4-aux. contacts)
1.27kg (2-aux. contacts)

### SC-E3RM, E4RM

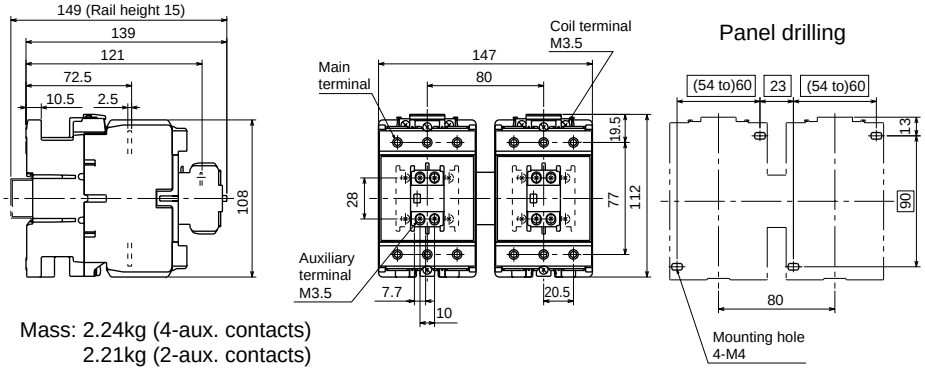


Mass: 2.24kg (4-aux. contacts)
2.21kg (2-aux. contacts)

## wiring diagrams

(1NO+1NC) x 2

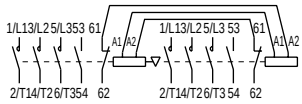


2NC x 2

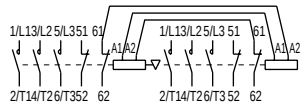


(2NO+2NC) x 2

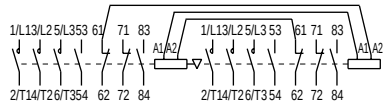


(3NO+NC) x 2

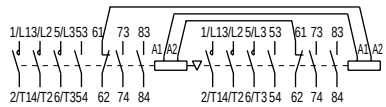

## Dimensions, mm

• **AC operated**

**SC-E5RM**

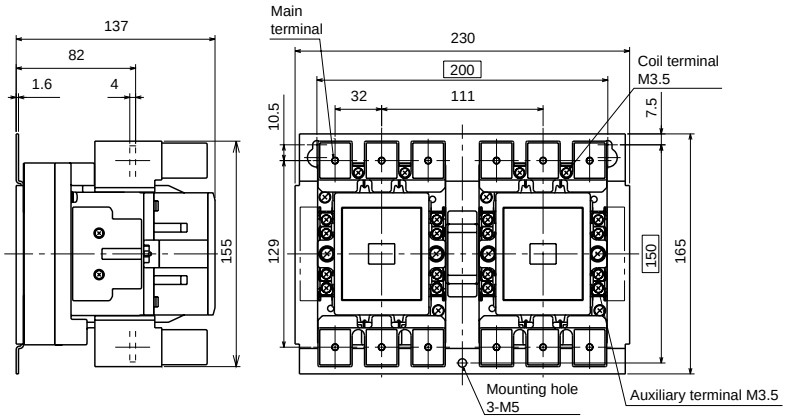


Mass : 4.64kg

**SC-E6RM**

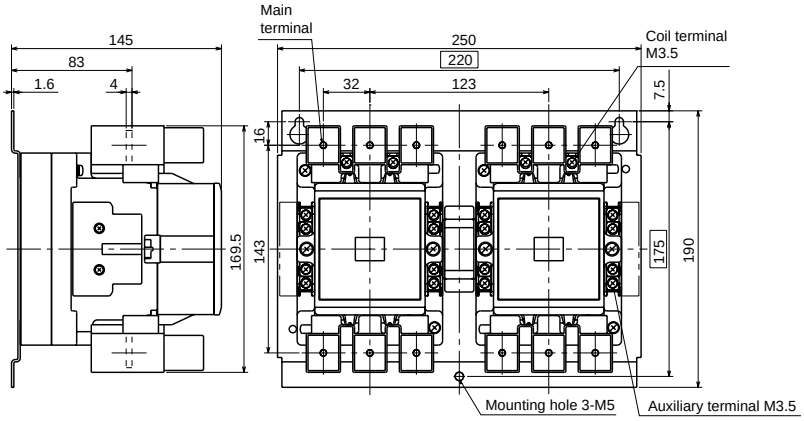


Mass : 5.8kg

• **SC-E7RM**

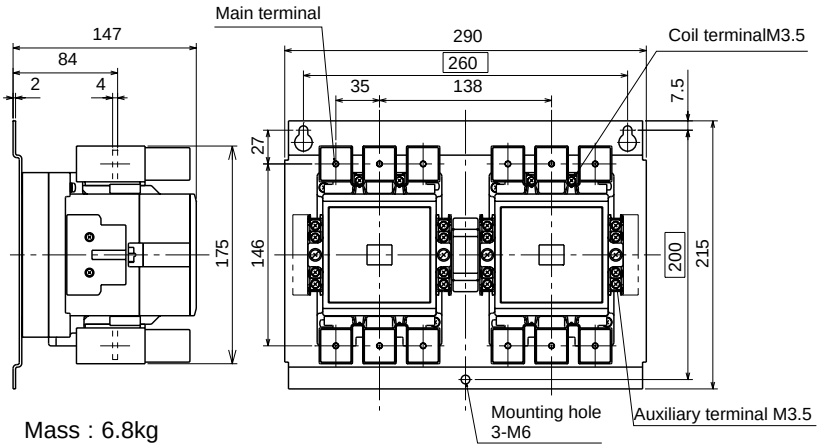


Mass : 6.8kg

## wiring diagrams

(1NO+1NC) x 2

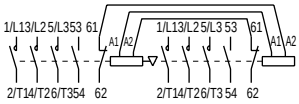


2NC x 2

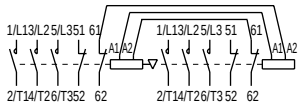


(2NO+2NC) x 2

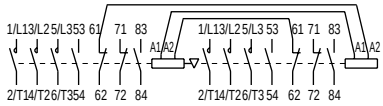


(3NO+NC) x 2

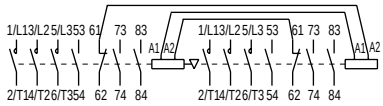

New Products

# Manual motor starters
# Power supply terminal covers

## New power supply terminal covers allow UL508 Type E and UL508 Type F applications for MMSs

### Features

- Combining the BZ0TCRE power supply terminal cover and BZ0TKUAB short-circuit alarm contact block in a FUJI BM3R series manual motor starter (MMS) allows it to be used as a manual self-protected combination controller (**Type E** combination motor controller). In the BM3V series, the BZ0TCRE power supply terminal cover is not necessary to fulfill the UL489 insulation distance requirement.

- Combining the BZ0TCRE power supply terminal cover and BZ0TKUAB short-circuit alarm contact block in a combination starter formed by a BM3R MMS and an SC-series magnetic contactor allows it be used as a self-protected combination controller (**Type F** combination motor controller). In the BM3V series, the BZ0TCRE power supply terminal cover is not necessary to fulfill the UL489 insulation distance requirement.

**Power supply terminal cover BZ0TCRE**

**MMS with BZ0TCRE**

**Type E advantages**

- Since the Type E can be used for branch circuit protection (BCP) as stipulated in NEC 430.52(c)(6), there is no need to provide upstream UL489-approved BCPs as short-circuit protection for motor branching circuits. Ordinarily, a separate BCP is necessary for each motor.
- It takes up less space inside the control panel.
  Note: Using Type E to eliminate the need for a BCP applies only to motor load circuits. It cannot be applied to other loads, such as resistance load and lamp load circuits.

**Type F advantages**

- By including a compliant MMS in the Type E and applying it as a BCP as stipulated in NEC 430.52(c)(6), there is no need to provide upstream UL489-approved BCPs as short-circuit protection for motor branching circuits. Ordinarily, a separate BCP is necessary for each motor.
- It takes up less space inside the control panel.
  Note: Using Type F to eliminate the need for a BCP applies only to motor load circuits. It cannot be applied to other loads, such as resistance load and lamp load circuits

### Type: BZ0TCRE

### Dimensions, mm

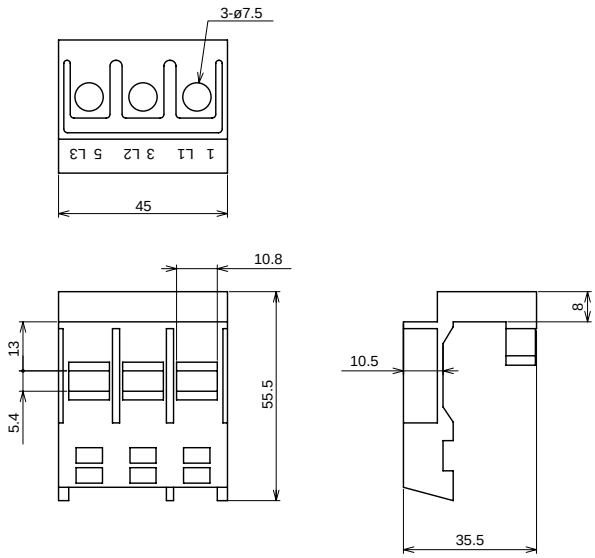


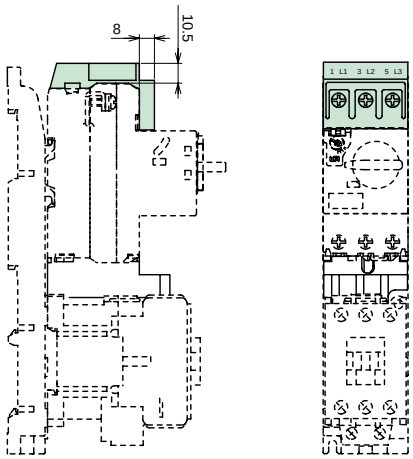

New Products

# 22mm-dia. emergency stop pushbutton switches AR22 series

## Integrated operator/contact block improves reliability.

### Features

- Reliability of safety functions increased by integrated operator/contact block construction.
- LED (24V AC/DC) and neon (110V, 120V, 220V, 240V AC) illuminated types available, with interconnected lamp circuit that turns the lamp on when the contacts are closed.
- White arrow on red button clearly indicates push-lock/turn-reset direction.
- Combination of AU-flashed Ag contacts and sliding mechanism ensures high contact reliability.
- Terminal cover for protection degree IP2X increases worker safety by preventing fingers from accidentally touching charged parts.
- FUJI original trigger action mechanism stops contacts from operating until the button is locked, to prevent accidental pressing by a person or object.
- Forced contact opening mechanism securely breaks the circuit even during errors, such as the partial welding of 1NC contacts.
- Conforms to international standards, including UL/CSA and EN European Standards (TÜV), and bears CE markings.

KK03-037

**AR22VGE**
Emergency stop pushbutton switch

KK03-036

**AR22VGF**
Emergency stop illuminated pushbutton switch

### Types and ratings

**• Emergency stop pushbutton switches EN418**
Forced contact opening and trigger action mechanisms

| Operator | Contact arrangement | Type | Button color |
|---|---|---|---|
| 40mm dia.<br>Push-lock, turn-reset | 1NC<br>1NO+1NC<br>2NC | **AR22VGE-01R**<br>**AR22VGE-11R**<br>**AR22VGE-02R** | Red |

**• Emergency stop illuminated pushbutton switches EN418**
Forced contact opening and trigger action mechanisms

| Operator | Type of lamp | Lamp voltage | Contact arrangement | Type | Button color |
|---|---|---|---|---|---|
| 40mm dia.<br>Push-lock, turn-reset | LED lamp<br>Full-voltage type | 24V AC/DC | 1NC<br>1NO+1NC<br>2NC | **AR22VGF-01E3R**<br>**AR22VGF-11E3R**<br>**AR22VGF-02E3R** | Red |
| | Neon lamp<br>Full-voltage type | 110V AC: H<br>120V AC: K<br>220V AC: M<br>240V AC: P | 1NC<br>1NO+1NC<br>2NC | **AR22VGF-01 □1R**<br>**AR22VGF-11 □1R**<br>**AR22VGF-02 □1R** | Red |

Note: • Replace the □ mark by the lamp voltage code. 110V AC: H, 120V AC: K, 220V AC: M, 240V AC: P
• Lamp contacts are built-in, and switch operation and lamp circuit are interconnected. When current is applied to the lamp circuit, the lamp turns on as soon as the contacts are colsed.

## Specifications

| | | |
|---|---|---|
| Rated insulation voltage Ui | | 250V AC/DC |
| Durability | Mechanical | Min. 100000 operations |
| | Electrical | Min. 100000 operations |
| Operating frequency | | 1800 operations/hour (on-load factor 40%) |
| Withstand voltage | | 2500V AC 1minute |
| Insulation resistance | | 100MΩ (500V DC megger) |
| Vibration | | Malfunction durability:<br>10-55Hz double amplitude 0.1mm<br>Mechanical durability:<br>16.7Hz double amplitude 3.0mm |
| Shock | | Malfunction durability: 150m/s²<br>Mechanical durability: 500m/s² |
| Ambient temperature | Operating | -20 to +60°C (Illuminated type: -20 to +50°C)<br>No icing, no condensation |
| | Storage | -40 to +80°C |
| Humidity (in box) | | 45 to 85%RH (at -5 to +40°C)<br>No icing, no condensation |
| Operator protection degree | | IEC 60529: IP65<br>JEM 1030: IP65f |
| Terminal protection degree | | IEC 60529: IP2X |

## Contact ratings

**JIS C 8201-5-1, IEC 60947-5-1, EN 60947-5-1** (TÜV R500281370001)

| Rated thermal current Ith (A) | Rated operational voltage Ue (V) | Rated operational current Ie (A) AC AC15 (Ind. load) | Rated operational current Ie (A) DC DC13 (Ind. load) |
|---|---|---|---|
| 10 | 24 | 6 | 1.5 |
| | 120 | 3 | — |
| | 125 | — | 0.3 |
| | 240 | 3 | — |
| | 250 | — | 0.15 |

**UL and CSA**

• AC (COSø=0.35)

| Contact rating code | 120V Make (A) | 120V Break (A) | 240V Make (A) | 240V Break (A) |
|---|---|---|---|---|
| B300 | 30 | 3 | 15 | 1.5 |

• DC (Time constant $T_{0.95}$=6P)

| Contact rating code | 125V Make/Break (A) | 250V Make/Break (A) |
|---|---|---|
| Q300 | 0.55 | 0.27 |

## Operating characteristics

| | |
|---|---|
| Operator | Push-lock, turn-reset |
| Required operating force | 26N |
| Operating stroke | Approx. 10mm |
| Resetting operation angle | Approx. 45° |
| Required resetting force | Approx. 0.2N•m |

## Standards

| | |
|---|---|
| UL508 | File No. E44592 (UL Recognized) |
| CSA C22.2 No. 14 | File No. E44592 (c-UL Recognized) |
| EN60947-5-1<br>EN60947-5-5 | TÜV licence No. R500281370001 |

## Dimensions, mm

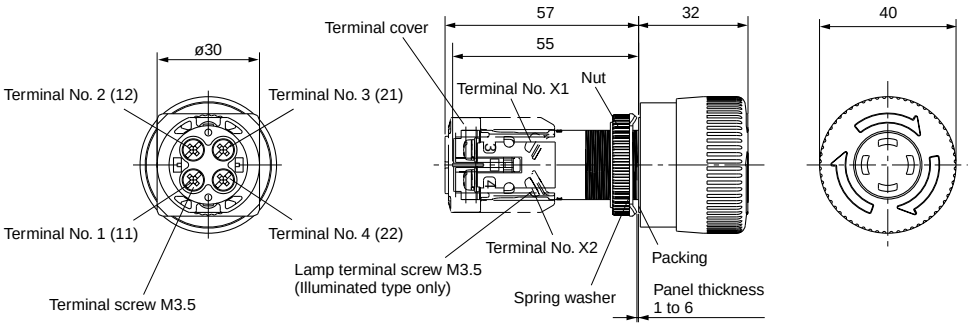


Note: Terminal No. shown in ( ) are for contact arrangement 2NC.

New Products

# 22mm-dia. emergency stop pushbutton switches AM22 series

## Emergency stop pushbutton switches with locking nut on the front panel.

### Features

- White arrow on red button clearly indicates push-lock/turn-reset direction.
- FUJI original trigger action mechanism stops contacts from operating until the button is locked, to prevent accidental pressing by a person or object.
- Forced contact opening mechanism securely breaks the circuit even during errors, such as the partial welding of 1NC contacts.
- Conforms to international standards, including UL/CSA and EN European Standards (TÜV), and bears CE markings.

KK02-236

**AM22V0E**
Emergency stop pushbutton switch

KK02-240, 239

**AM22V0F**
Emergency stop illuminated pushbutton switch

### Types and ratings

**Emergency stop pushbutton switches EN418**
Forced contact opening and trigger action mechanisms

| Operator | Contact arrangement | Type | Button color |
|---|---|---|---|
| 40mm dia. Push-lock, turn-reset | 1NC | **AM22V0E-01R** | Red |
| | 1NO+1NC | **AM22V0E-11R** | |
| | 2NC | **AM22V0E-02R** | |
| | 3NC | **AM22V0E-03R** | |
| | 2NO+2NC | **AM22V0E-22R** | |
| | 4NC | **AM22V0E-04R** | |
| 29mm dia. Push-lock, turn-reset | 1NC | **AM22VSE-01R** | Red |
| | 1NO+1NC | **AM22VSE-11R** | |
| | 2NC | **AM22VSE-02R** | |
| | 3NC | **AM22VSE-03R** | |
| | 2NO+2NC | **AM22VSE-22R** | |
| | 4NC | **AM22VSE-04R** | |

Notes: • Up to 4-contact blocks are available.
• NO contact is used for overlap contact.

**Emergency stop illuminated pushbutton switches EN418**
Forced contact opening and trigger action mechanisms

| Operator | Trans-former | Lamp voltage | Contact arrangement | LED lamp Type | Button color |
|---|---|---|---|---|---|
| 40mm dia. Push-lock, turn-reset | Without | 24V AC/DC | 1NC | **AM22V0F-01E3R** | Red |
| | | | 1NO+1NC | **AM22V0F-11E3R** | |
| | | | 2NC | **AM22V0F-02E3R** | |
| | | | 3NC | **AM22V0F-03E3R** | |
| | With | 110V AC: H | 1NC | **AM22V0F-01□3R** | |
| | | 220V AC: M | 1NO+1NC | **AM22V0F-11□3R** | |
| | | | 2NC | **AM22V0F-02□3R** | |
| 29mm dia. Push-lock, turn-reset | Without | 24V AC/DC | 1NC | **AM22VSF-01E3R** | |
| | | | 1NO+1NC | **AM22VSF-11E3R** | |
| | | | 2NC | **AM22VSF-02E3R** | |
| | | | 3NC | **AM22VSF-03E3R** | |
| | With | 110V AC: H | 1NC | **AM22VSF-01□3R** | |
| | | 220V AC: M | 1NO+1NC | **AM22VSF-11□3R** | |
| | | | 2NC | **AM22VSF-02□3R** | |
| Transparent colored 40mm dia. Push-lock, turn-reset | Without | 24V AC/DC | 1NC | **AM22VDF-01E3R** | |
| | | | 1NO+1NC | **AM22VDF-11E3R** | |
| | | | 2NC | **AM22VDF-02E3R** | |
| | | | 3NC | **AM22VDF-03E3R** | |
| | With | 110V AC: H | 1NC | **AM22VDF-01□3R** | |
| | | 220V AC: M | 1NO+1NC | **AM22VDF-11□3R** | |
| | | | 2NC | **AM22VDF-02□3R** | |

Note: Replace the □ mark by the lamp voltage code. 110V AC: H, 220V AC: M

**• LED lamp voltage**

| Lamp voltage | Full-voltage | | With transformer | | | | | | | |
|---|---|---|---|---|---|---|---|---|---|---|
| | 6V AC | 24V AC/DC | 110V AC | 127V AC | 220V AC | 254V AC | 380V AC | 440V AC | 480V AC | 550V AC |
| Code | A | E | H | L | M | Q | S | T | V | W |

Notes: • 6V AC LED lamp is used for the separate mounting transformer.
• NO contact is used for overlap contact.
• Switch operation and lamp circuit are not interconnected.

## Specifications

| | | |
|---|---|---|
| Rated thermal current | | 10A |
| Rated insulation voltage Ui | | 600V AC/DC<br>(Illuminated full-voltage type 250V AC/DC) |
| Durability | Mechanical | Min. 300000 operations |
| | Electrical | Min. 300000 operations |
| Operating frequency | | 1200 operations/hour (on-load factor 40%) |
| Withstand voltage | | 2500V AC 1minute |
| Insulation resistance | | 100MΩ (500V DC megger) |
| Vibration | | Malfunction durability:<br>10-55Hz double amplitude 0.1mm<br>Mechanical durability:<br>16.7Hz double amplitude 3.0mm |
| Shock | | Malfunction durability: 150m/s²<br>Mechanical durability: 500m/s² |
| Ambient temperature | Operating | -20 to +60°C (Illuminated type: -20 to +50°C)<br>No icing, no condensation |
| | Storage | -40 to +80°C |
| Humidity (in box) | | 45 to 85%RH (at -5 to +40°C)<br>No icing, no condensation |
| Operator protection degree | | IEC 60529: IP65<br>JEM 1030: IP65f |

## Operating characteristics

| | |
|---|---|
| Operator | Push-lock, turn-reset |
| Required operating force | Approx. 23N |
| Operating stroke | Approx. 9mm |
| Resetting operation angle | Approx. 60° |
| Required resetting force | Approx. 0.25N•m |

## Standards

| | |
|---|---|
| UL508 | File No. E 44592 (UL Listed) |
| CSA C22.2 No.14 | File No. LR 20479 |
| EN 60947-5-1<br>EN 60947-5-5 | TÜV licence No. R50028146 |

## Contact ratings

**JIS C 8201-5-1, IEC 60947-5-1, EN 60947-5-1** (TÜV R50028146)

| Rated operational voltage Ue (V) | Rated operational current Ie (A) | |
|---|---|---|
| | AC<br>AC15 (Ind. load) | DC<br>DC13 (Ind. load) |
| 24 | 6 | 2 |
| 120 | 6 | — |
| 125 | — | 0.65 |
| 240 | 6 | — |
| 250 | — | 0.23 |
| 480 | 2.5 | — |
| 600 | 2 | — |

**UL and CSA**

• AC (COSø=0.35)

| Contact rating code | 120V | | 240V | | 480V | | 600V | |
|---|---|---|---|---|---|---|---|---|
| | Make (A) | Break (A) | Make (A) | Break (A) | Make (A) | Break (A) | Make (A) | Break (A) |
| A600 | 60 | 6 | 30 | 3 | 15 | 1.5 | 12 | 1.2 |

• DC (Time constant $T_{0.95}$=6P)

| Contact rating code | 125V | 250V | 300-600V |
|---|---|---|---|
| | Make/Break (A) | Make/Break (A) | Make/Break (A) |
| Q600 | 0.55 | 0.27 | 0.1 |

## Dimensions, mm

**• 40mm dia. push-lock, turn-reset AM22V0E**

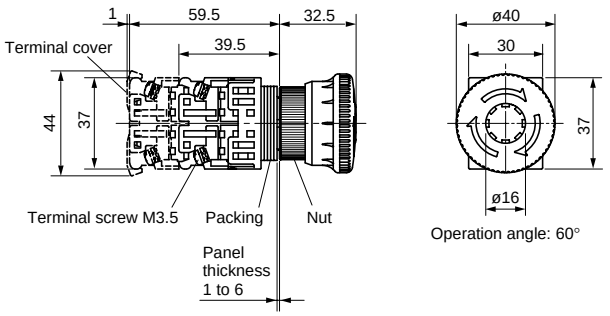


**• 40mm dia. push-lock, turn-reset with transformer AM22V0F**

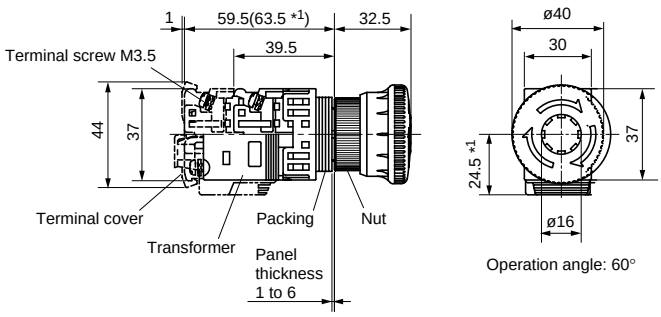


Note: *1 Dimensions for the types with transformers of the lamp voltages 254V to 550V AC.

New Products

# Display lights DP36 and 40 series

## New design with high-brightness LED and self-lifting terminal improves safety and working conditions.

### Features

- Employs high-brightness LED
- New LED lamp significantly reduces power consumption and mass.
- Reduces wiring work and improves safety by integrating the FUJI self-lifting terminal (quick mounting terminal) and terminal cover
- LED lamp incorporates a circuit to prevent lighting errors.
- Modular design of LED unit allows easy changes in colors and color arrangement (two- and three-split rectangular illumination faces).
- Can be used with film legend plates.
- Ideal for side-by-side mounting

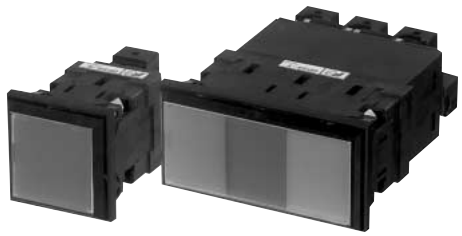

KK03-072A

**DP36 series**

### Types and ratings

**• DP36 series (LED lamp)**

| Shape of illumination face | Illumination type | Voltage input type | Lamp voltage | Type | |
|---|---|---|---|---|---|
| Square, 36x36mm  DP36S1N | Full face | Full voltage | 12V AC/DC<br>24V AC/DC | **DP36S1N-□B3**<br>**DP36S1N-□E3** | Specify the illumination color code in the □ mark.<br><br>Red: R<br>Green: G<br>Yellow: Y<br>Orange: A<br>White: W<br>Blue: S<br>Snow-white: P |
| | | With resistor unit | 100 to 110V AC/DC | **DP36S1N-□H3** | |
| | | With CR unit | 200 to 220V AC/DC | **DP36S1N-□M3** | |
| Rectangular, 36x72mm 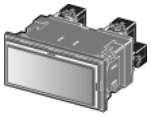 DP36T1N | Full face | Full voltage | 12V AC/DC<br>24V AC/DC | **DP36T1N-□B3**<br>**DP36T1N-□E3** | |
| | | With resistor unit | 100 to 110V AC/DC | **DP36T1N-□H3** | |
| | | With CR unit | 200 to 220V AC/DC | **DP36T1N-□M3** | |
| | 2-split face | Full voltage | 12V AC/DC<br>24V AC/DC | **DP36T2N-□□B3**<br>**DP3612N-□□E3** | |
| | | With resistor unit | 100 to 110V AC/DC | **DP36T2N-□□H3** | |
| | | With CR unit | 200 to 220V AC/DC | **DP36T2N-□□M3** | |
|  DP36T3N | 3-split face | Full voltage | 12V AC/DC<br>24V AC/DC | **DP36T3N-□□□B3**<br>**DP36T3N-□□□E3** | |
| | | With resistor unit | 100 to 110V AC/DC | **DP36T3N-□□□H3** | |
| | | With CR unit | 200 to 220V AC/DC | **DP36T3N-□□□M3** | |

Notes: • Voltages other than above are available.
• DP36S1N, T1N and T2N with check terminals are also available.

**• DP40 series (LED lamp)**

| Shape of illumination face | Illumination type | Voltage input type | Lamp voltage | Type | |
|---|---|---|---|---|---|
| Square, 40x40mm  DP40S1N | Full face | Full voltage | 12V AC/DC<br>24V AC/DC | **DP40S1N-□B3**<br>**DP40S1N-□E3** | Specify the illumination color code in the □ mark.<br><br>Red: R<br>Green: G<br>Yellow: Y<br>Orange: A<br>White: W<br>Blue: S<br>Snow-white: P |
| | | With resistor unit | 100 to 110V AC/DC | **DP40S1N-□H3** | |
| | | With CR unit | 200 to 220V AC/DC | **DP40S1N-□M3** | |
| Rectangular, 40x80mm  DP40T1N | Full face | Full voltage | 12V AC/DC<br>24V AC/DC | **DP40T1N-□B3**<br>**DP40T1N-□E3** | |
| | | With resistor unit | 100 to 110V AC/DC | **DP40T1N-□H3** | |
| | | With CR unit | 200 to 220V AC/DC | **DP40T1N-□M3** | |
| | 2-split face | Full voltage | 12V AC/DC<br>24V AC/DC | **DP40T2N-□□B3**<br>**DP4012N-□□E3** | |
| | | With resistor unit | 100 to 110V AC/DC | **DP40T2N-□□H3** | |
| 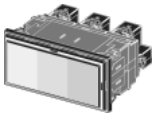 DP40T3N | | With CR unit | 200 to 220V AC/DC | **DP40T2N-□□M3** | |
| | 3-split face | Full voltage | 12V AC/DC<br>24V AC/DC | **DP40T3N-□□□B3**<br>**DP40T3N-□□□E3** | |
| | | With resistor unit | 100 to 110V AC/DC | **DP40T3N-□□□H3** | |
| | | With CR unit | 200 to 220V AC/DC | **DP40T3N-□□□M3** | |

Notes: • Voltages other than above are available.
• DP36S1N, T1N and T2N with check terminals are also available.

## Dimensions, mm

**• DP36 series**

**• Square, 36x36mm**

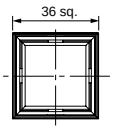


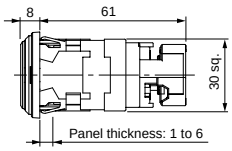


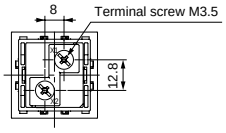


Mass: 42g

Panel cutting

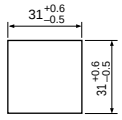


**• Rectangular, 36x72mm**

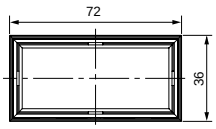


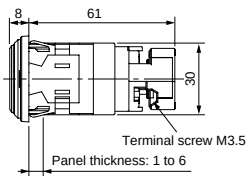


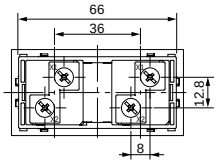


Mass: 86g

3-split face type

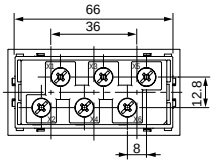


Mass: 103g

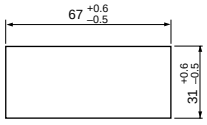


**• DP40 series**

**• Square, 40x40mm**

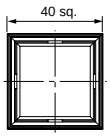


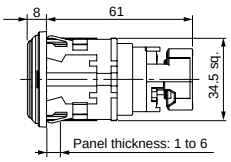


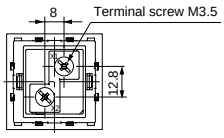


Mass: 48g

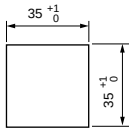


**• Rectangular, 40x80mm**

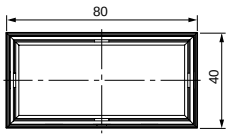


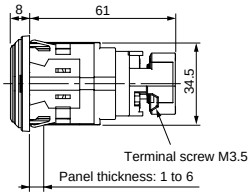


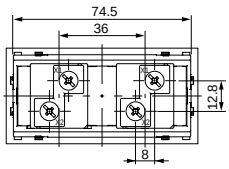


Mass: 96g

3-split face type

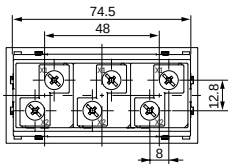


Mass: 114g

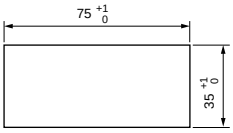

New Products

# Power terminal blocks SKT series

## Further improving the efficiency and ease of wiring and inspections

### Features

- Transparent terminal cover allows the wiring configuration to be checked externally.
- Slotted hexagon head bolts that can be tightened with screwdrivers or box wrenches are used for the terminals.
- The line side and load side are provided with hinged terminal covers to ensure safety and allow easier maintenance and inspections.
- cUL approved, file No. E45457
  SKT14A-3C to SKT100A3C only.

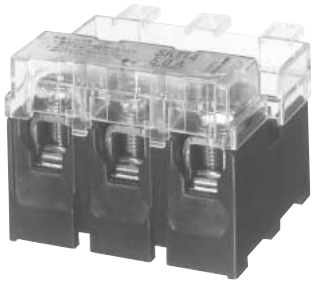

AF01-220

SKT14A-3C

### Types and ratings

**• Terminal blocks**

| Pole | Rated insulation voltage (V AC) | Rated continuous current (A) | Applicable cable size ($mm^2$) | Type |
|---|---|---|---|---|
| 3 | 600 | 50 | 2 to 14 | **SKT14A-3C** |
| | | 100 | 2 to 38 | **SKT38A-3C** |
| | | 150 | 14 to 60 | **SKT60A-3C** |
| | | 200 | 30 to 100 | **SKT100A-3C** |
| 3 + 1 (Earth terminal) | 600 | 50 | 2 to 14 | **SKT14A-3CG** |
| | | 100 | 2 to 38 | **SKT38A-3CG** |
| | | 150 | 14 to 60 | **SKT60A-3CG** |
| | | 200 | 30 to 100 | **SKT100A-3CG** |

**• Connectors**

| Rated insulation voltage (V AC) | Rated continuous current (A) | Applicable cable size ($mm^2$) | Type |
|---|---|---|---|
| 600 | 50 | 2 to 14 | **SKT14-S** |
| | 100 | 2 to 38 | **SKT38-S** |
| | 150 | 14 to 60 | **SKT60-S** |
| | 200 | 30 to 100 | **SKT100-S** |
| | 400 | 80 to 200 | **SKT200-S** |
| | 400 | 80 to 200 | **SKT200-SD** |
| | 200 | 30 to 80 | |

### Specifications

| | |
|---|---|
| Insulation resistance | 100MΩ or more (500V DC megger) |
| Withstand voltage | 2500V AC 1minute |
| Ambient temperature | -20 to +55°C |
| Humidity | 85%RH or less |
| Flammability | UL94V-2 (Cover) |
| Temperature rise | 45K or less (JIS C 2811) |

### Tightening torque

| Type | Recommended tightening torque (N•m) | | Cable pull-out min. force (N) | |
|---|---|---|---|---|
| | Line side | Load side | Min. cable | Max. cable |
| **SKT14A-3C** | 4.5–5.0 | 11.5–15.5 | 222 | 400 |
| **SKT14A-3CG** | (M6) | (14$mm^2$, M8) | (2$mm^2$) | (14$mm^2$) |
| **SKT38A-3C** | 4.5–5.0 | 11.5–15.5 | 222 | 445 |
| **SKT38A-3CG** | (M6) | (38$mm^2$, M8) | (2$mm^2$) | (38$mm^2$) |
| **SKT60A-3C** | 9–10 | 11.5–15.5 | 311 | 623 |
| **SKT60A-3CG** | (M8) | (60$mm^2$, M8) | (14$mm^2$) | (60$mm^2$) |
| **SKT100A-3C** | 15–20 | 23–31 | 311 | 801 |
| **SKT100A-3CG** | (M10) | (100$mm^2$, M10) | (30$mm^2$) | (100$mm^2$) |

## Dimensions, mm

**• Terminal block**

SKT14A-3C (Without earth terminal)
SKT14A-3CG (With earth terminal)

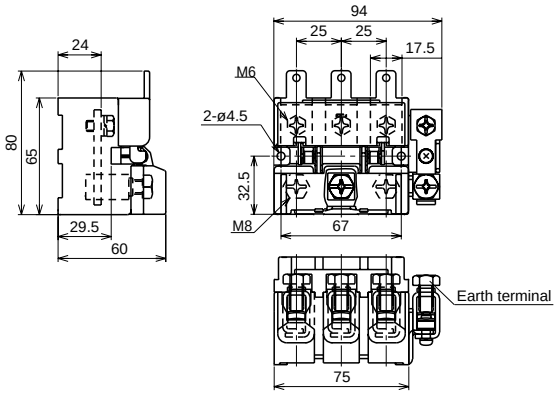


SKT38A-3C (Without earth terminal)
SKT38A-3CG (With earth terminal)

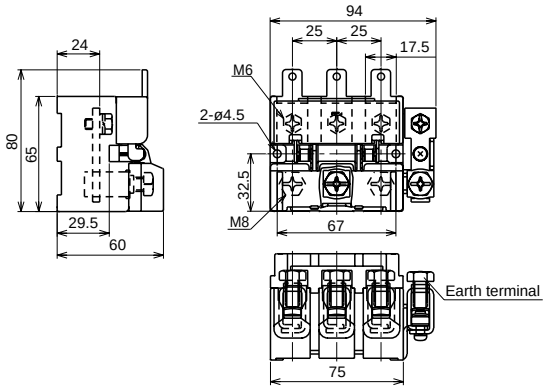


SKT60A-3C (Without earth terminal)
SKT60A-3CG (With earth terminal)

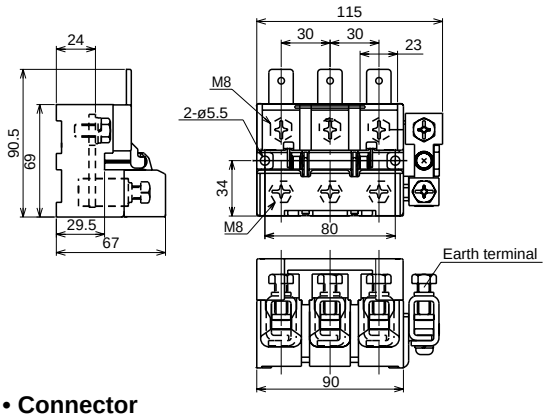


SKT100A-3C (Without earth terminal)
SKT100A-3CG (With earth terminal)

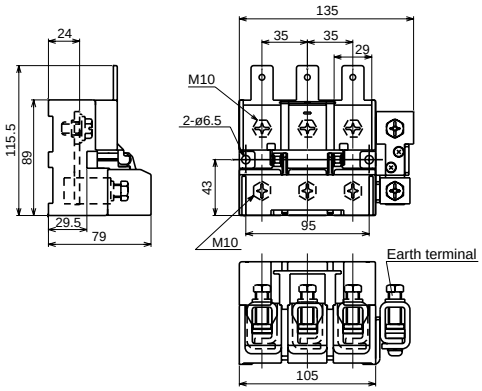


**• Connector**

SKT14-S

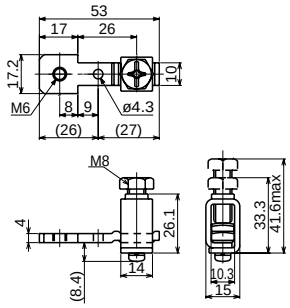


SKT38-S

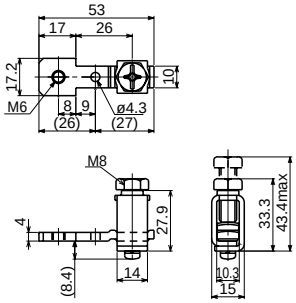


SKT60-S

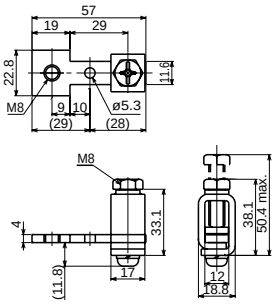


SKT100-S

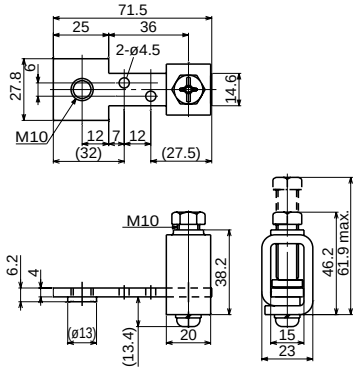


SKT200-S

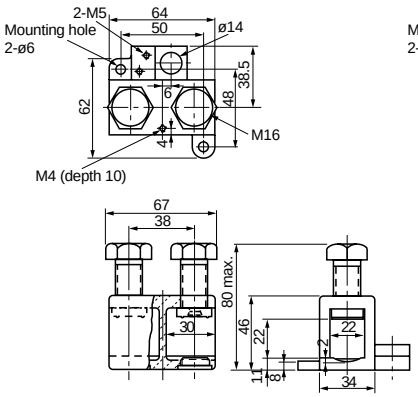


SKT200-SD

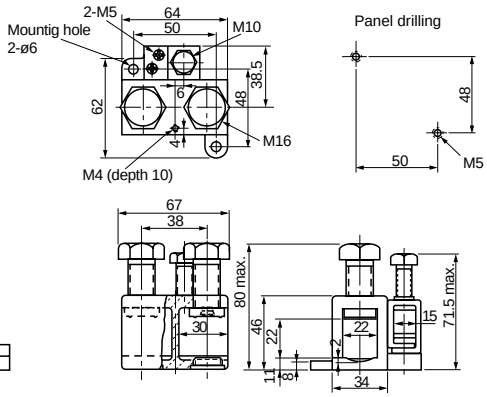

New Products

# AC voltage and current transducers WT2AC series

## Isolated AC transducers with a thin profile and excellent cost performance

### Features

FUJI WT2 AC voltage and current transducers convert AC voltage/current into DC voltage/current, and also isolate input/output circuits and power supplies.

- Select from an 85 to 264V AC, 24V DC, or 110V DC control power supply
- Three isolated ports: input, output, and power supply
- Use either IEC 35mm rail mounting or screw mounting
- Screw terminals with cover ensure safe, sure connection.

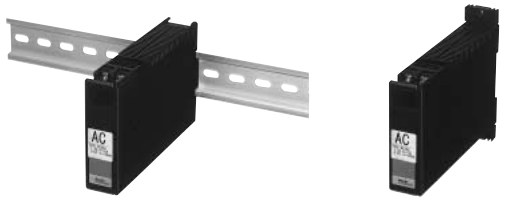

Rail mounting　　Screw mounting

### Specifications and performance

**• Performance**

Accuracy: ±0.4% FS
Temperature characteristic: ±0.2%/10°C FS(Typical)
Response time: 0.5s max. (0 to 90%)
Insulation resistance: 100MΩ (500V DC megger)
Withstand voltage: 2000V AC 1min

**• Input**

| | Input signal | Input frequency |
|---|---|---|
| Voltage input | 0 to 110V AC | 50Hz, 60Hz |
| | 0 to 150V AC | |
| | 0 to 300V AC | |
| Current input | 0 to 1A AC | |
| | 0 to 5A AC | |

**• Output**

| | Output signal | Permissible external resistance |
|---|---|---|
| Voltage output | 0 to 10mV | 10kΩ or more |
| | 0 to 100mV | 100kΩ or more |
| | 0 to 1V | 200kΩ or more |
| | 0 to 5V DC, 1 to 5V DC | 1kΩ or more |
| | 0 to 10V DC | 2kΩ or more |
| Current output | 0 to 1mA DC | 15kΩ or less |
| | 0 to 5mA DC | 3kΩ or less |
| | 0 to 10mA DC | 1.5kΩ or less |
| | 0 to 16mA DC | 900Ω or less |
| | 0 to 20mA DC | 750Ω or less |
| | 1 to 5mA DC | 3kΩ or less |
| | 2 to 10mA DC | 1.5kΩ or less |
| | 4 to 20mA DC | 750Ω or less |

### Input-output

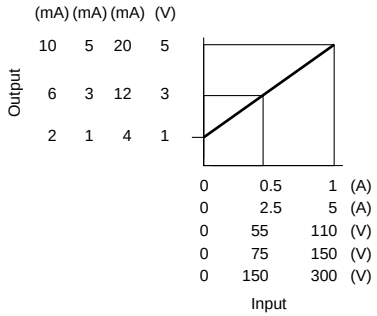


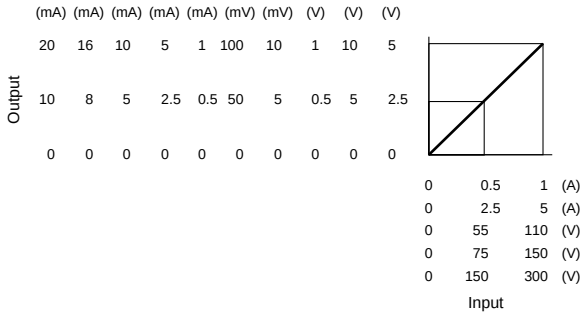

## Dimensions, mm

**• Rail mounting**

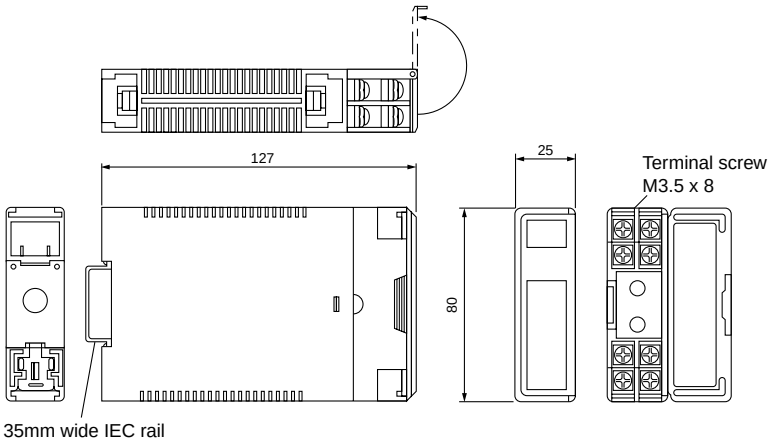


**• Screw mounting**

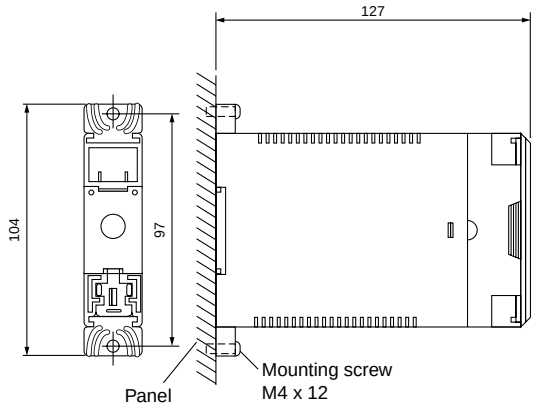


Panel drilling

One-unit mounted

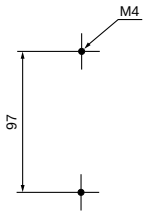


n-unit mounted

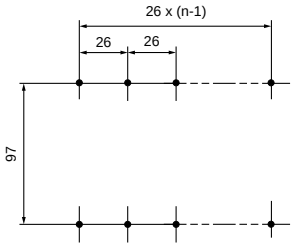


## Wiring diagram

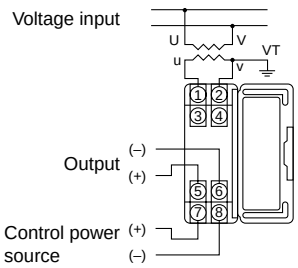


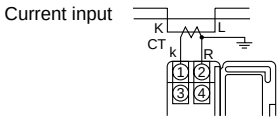

New Products

# Arresters for low voltage circuit CN233 series

## Addition of 20kA models absorbing inductive lightning surges from power supply

### Features

- Coordinated operation of 2 types of varistors enables extremely fast response to surges and a high level absorption.
- Built-in thermal fuses prevent problems such as short-circuit due to deterioration of elements.
- Indicators for easy confirmation of device status
- Integrated terminal construction reduces space and wiring requirements for easier handling of the arrester.
- Standard-feature terminal cover to protect against electrical shock

CN233 series

### Application

- Electronic devices, such as computers, measurement devices, and communications devices
- Inverters and UPSs
- Electronic devices inside distribution boards (e.g., power distribution boards and lighting distribution boards)

### Specifications

| Type | | CN23311 | CN23312 | CN23332 | | CN2334E |
|---|---|---|---|---|---|---|
| Rated voltage | | Single-phase/2-wire 110V | Single-phase/2-wire 220V | 3-phase/3-wire 220V | Single-phase/3-wire 100V/200V | 3-phase/3-wire 440V (Voltage to ground) |
| Reference voltage $V_{1ma}$ | Line | 240 to 310V | 420 to 520V | 420 to 520V | | – |
| | Ground | 420 to 520V | 610 to 750V | 610 to 750V | | 850 to 1100V |
| Clamping voltage $V_p$ | Line | 700V max. | 1100V min. | 1100V max. | | – |
| | Ground | 1000V max. | 1500V min. | 1500V max. | | 2500V max. |
| Discharge current (8/20µs) | Line | 5kA (2 times) | | | | – |
| | Ground | 20kA (2 times) | | | | 20kA (2 times) |

### Internal wiring

- **CN23311, CN23312**

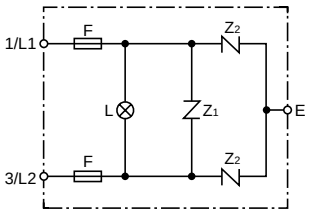


- **CN23332**

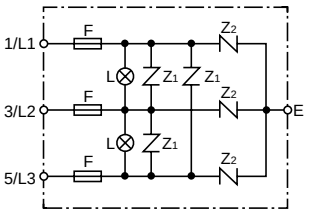


- **CN2334E**

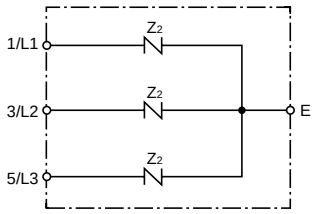


F:Thermal fuse L: Indicator Z1, Z2: Component for surge protective device

## Application example

• Single-phase/2-wire (110AC, 220V AC)

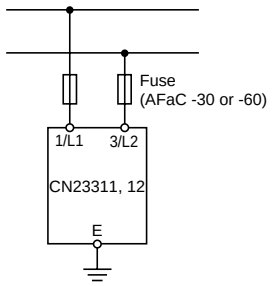


• Single-phase/3-wire (100/200V AC)

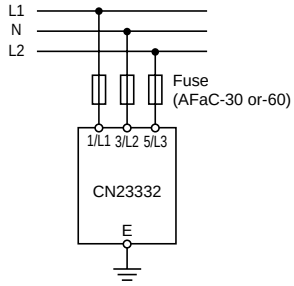


• 3-phase/3-wire (220V AC)

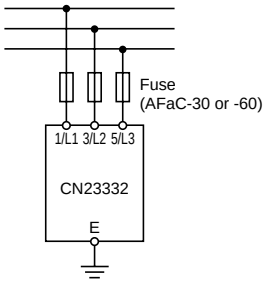


• 3-phase/3-wire (440V AC)

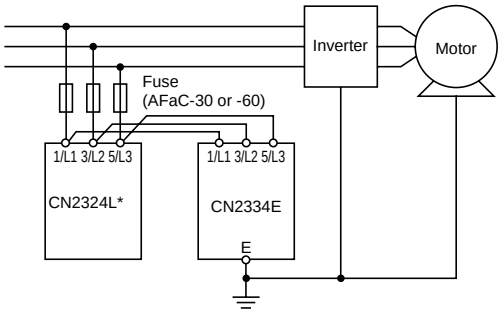


* Do not wire to the black-colored screw terminal.

## Dimensions, mm

• **CN233**

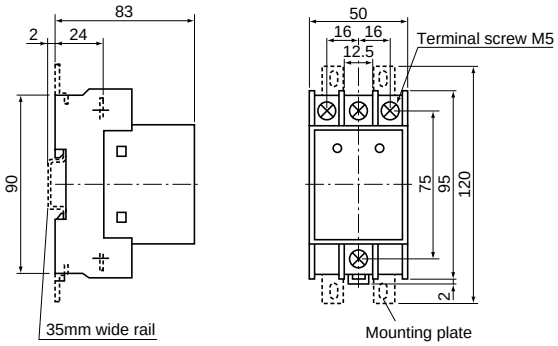


Panel drilling

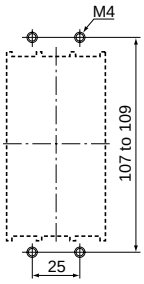

New Products

# AC power distribution monitoring unit for one feeder, F-MPC04 series

## Digital multimeters – all of the measurement functions for AC power distribution monitoring in a single unit

### Features

**A wide variety of output functions to select from for preventive maintenance**

- Power alarm/current prealarm output provided
- Electric energy pulse signal provided
- Leakage current alarm, leakage current prealarm output (with leakage current measuring function only)

**Capable of measuring inrush current of equipment such as welders**

- High-speed sampling and calculation of voltage and current

**Compact design allows installation almost anywhere.**

- Space-saving construction simplifies installation.
- Monitors individual equipment, sections, and the entire floor

**Networking capability**

- External interface uses RS-485 communications.
- Can be connected to the same electric power distribution system as other F-MPC (04, 04P, 30, 60B series) products


UM03-ARA3

### Types and functions

| Function | | Type |
|---|---|---|
| Leakage current measuring function | Not provided | **UM03-ARA3** |
| | Provided | **UM03-ARA3G** |

### System configuration

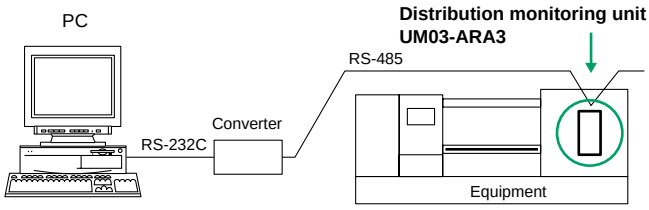


### Specifications

**• General**

| | |
|---|---|
| Applicable circuit | 3-phase 3-wire: 2-CT, single-phase 3-wire: 2-CT, single-phase 2-wire: 1-CT |
| Control power supply | 100 to 200V AC ( 85 to 264V AC) 50/60Hz (45 to 66Hz) |
| Inrush current | 15A, 3ms or less (at 110V AC, 50Hz)<br>30A, 3ms or less (at 220V AC, 50Hz) |
| Control power consumption | Approx. 7VA (at 220V AC) Approx. 5VA (at 110V AC) |
| Short-time overload resistance Current input circuit<br>Voltage input circuit | Max. 20 times setting value, 9 times for 0.5s<br>Max. 2 times setting value, 9 times for 0.5s |
| Vibration | 10 to 58Hz 0.075mm (one-way amplitude) |
| Shock | 300m/s$^2$, in each X, Y, and Z directions, 2 times |
| Withstand voltage / Insulation resistance (500V DC megger) | 2kV /10MΩ Between power supply terminals connected together and other terminals connected together<br>2kV /10MΩ Between measurement input terminals connected together and other terminals connected together<br>2kV /10MΩ Between alarm output terminals connected together and other terminals connected together<br>500V /10MΩ Between watthour pulse output terminals connected together and other terminals connected together |
| Ambient temperature | Operating: -10 to +55˚C<br>Storage: -20 to +70˚C |
| Humidity<br>Atmosphere<br>Grounding<br>Allowable power interrupting time | 20 to 90%RH (no condensation)<br>Free from corrosive gases and excessive of dusts<br>Grounding resistance of 100Ω or less<br>20ms (unit will continue operation) |

### • Measurement

| Item | Effective measurement range | Display | Accuracy |
|---|---|---|---|
| Current, demand current<br>Max. demand current value | • With split toroidal CT (200A AC) *<br>0, 0.4 % of In (0.8A) to 300A | 4-digit | R- and T-phase: ±1.5% FS<br>S-phase: ±2.5% FS |
| Demand value and max. demand value of higher harmonic current | • With split toroidal CT (400A AC) *<br>0, 0.4% of In (1.6A) to 600A | 4-digit | ± 2.5% FS |
| Demand active power<br>Max. demand active power value | • With small split toroidal CT (5A) *<br>0, 0.4% of In (0.2A) to 50A | 4-digit | ±1.5% FS |
| Reactive power | 0, to 1.5 times CT rating (for 5A) | 4-digit | ±3% FS |
| Power factor | • Demand time setting: 0, 1 to 15min | 3-digit | ±5% FS Converted into a phase angle of 90° |
| Active electric energy | (by 1min stepped ) | 5-digit | Equivalent to JIS standard class |
| Reactive electric energy | 30min setting: Available | 5-digit | ±5% |
| Voltage | Converted into an input voltage<br>60 to 264 V AC | 4-digit | Vu-v and Vw-u: ±1.5% FS, Vv-w: ±2.5% FS |
| Frequency | 45 to 66Hz | 3-digit | ±0.5% FS |
| Leakage current (I/o /Iob)<br>Max. demand value | 0, 10 to 1000mA | 4-digit | ±2.5% |

Note: New model CTs, see page 20.

### • Output

| Item | | UM03-ARA3 | UM03-ARA3G | Specification |
|---|---|---|---|---|
| Watt-hour pulse output | | Provided | Provided | Transistor open collector output 35V DC 100mA |
| Alarm output | Current prealarm (OCA), power alarm | Provided | Provided | Replay output 250V AC 1A |
| | Leakage current prealarm (OCGA)<br>Leakage current alarm (OCGA) | Not provided | Provided | |

## Front panel

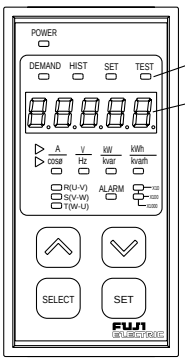


Measurement mode display LEDs

Measurement value, or set value display

Display item, or unit LEDs

Selection switches

### • Terminal layout

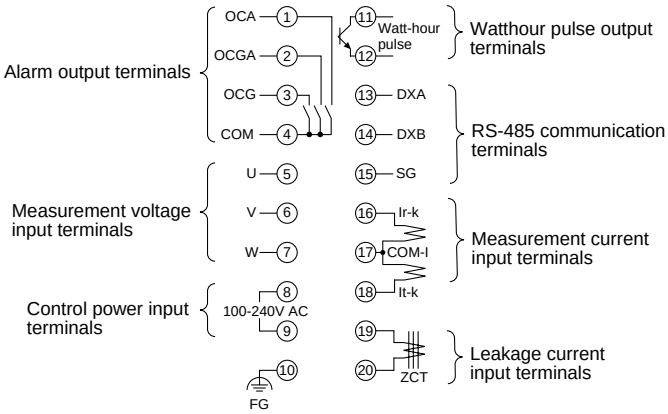


Note: Alarm output terminal ② ③ and ZCT input terminal ⑲ ⑳ of the UM03-ARA3 (without leakage current measuring function) are NC terminals. Do not connect anything to these terminals.

## Dimensions, mm

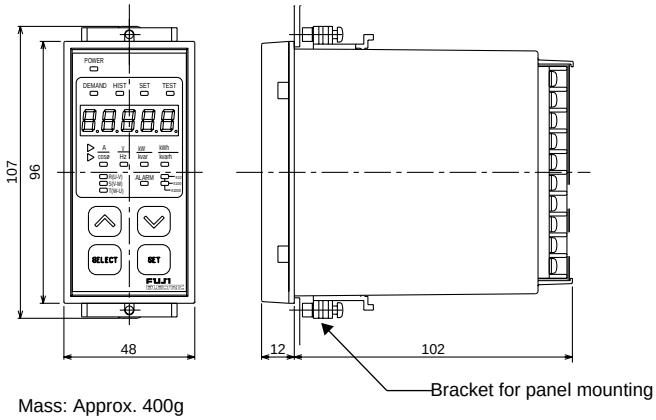


Mass: Approx. 400g

Panel cutting

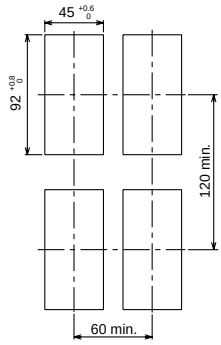

# New split toroidal type current transformers/CC2D

## Features

Designed for even easier handling. Line-up includes types designed specially for FUJI multiple function protectors and controllers (F-MPC), and types for use with other instrumentation.

- Improved design enables easier mounting.
- Large K→L display allows easier identification of primary conductor direction.
- Hook attached makes it easier to secure the primary conductor with a retaining band.
- Built-in clamping diode (on all types except the CC2D81) CT secondary wiring will not burn out even with the contact open.

CC2D

## Types and ratings

| Type | Rated primary current (A) | Rated secondary current | Rated frequency (Hz) | Rated burden | Withstand voltage | Connection | Mass (g) |
|---|---|---|---|---|---|---|---|
| **CC2D81-0057** | 5 | 7.34mA | 50/60 | 0.2693mVA<br>Load resistance: 5Ω | 1000V AC/1min<br>Between sensor core and output | Heat-resistant IV cable AWG22 x1000mm supplied | 45 |
| **CC2D81-0506** | 50 | 73.4mA | 50/60 | 26.93mVA<br>Load resistance: 5Ω | 1000V AC/1min<br>Between sensor core and output | Heat-resistant IV cable AWG22 x1000mm supplied | 45 |
| **CC2D65-2008** | 200 | 66.7mA | 50/60 | 44.4mVA<br>Load resistance: 10Ω or less | 2000V AC/1min<br>Between sensor core and output | Heat-resistant IV cable AWG18 x1000mm supplied | 200 |
| **CC2D54-4009** | 400 | 133.33mA | 50/60 | 88.9mVA<br>Load resistance: 5Ω or less | 2000V AC/1min<br>Between sensor core and output | Heat-resistant IV cable AWG18 x1000mm supplied | 300 |
| **CC2D74-1001**<br>**CC2D74-2001**<br>**CC2D74-4001** | 100<br>200<br>400 | 1A<br>1A<br>1A | 50/60 | 0.5VA<br>Load resistance: 0.5Ω or less | 2000V AC/1min or more<br>Between sensor core and output | Heat-resistant IV cable AWG18 x1000mm supplied | 300 |

## Performance

| Application | Type | Ratio error | Phase difference | Insulation resistance | Output protection | Operating temperature and humidity |
|---|---|---|---|---|---|---|
| For F-MPC | **CC2D81-0057** | ±1% In<br>±1.5%/0.2 In | 150' ±150' /In<br>180' ±180' /0.2 In | 100MΩ<br>(500V DC megger) | Not provided | –20 to +50°C<br>80%RH or less<br>No condensation |
| | **CC2D81-0506** | | 150' ±150' /In<br>180' ±180' /0.2 In | | | |
| | **CC2D65-2008** | | ±60' /In<br>±90' /0.2 In | 100MΩ<br>(500V DC megger) | Provided<br>Built-in clamping diode | |
| | **CC2D54-4009** | | ±60' /In<br>±90' /0.2 In | | | |
| General purpose | **CC2D74-1001** | ±1% In<br>±1.5%/0.2 In | 90' ±90' /In<br>120' ±120' /0.2 In | | | |
| | **CC2D74-2001** | | 60' ±60' /In<br>90' ±90' /0.2 In | | | |
| | **CC2D74-4001** | | ±80' /In ±100' /0.2 In | | | |

## Dimensions, mm

• **CC2D81**

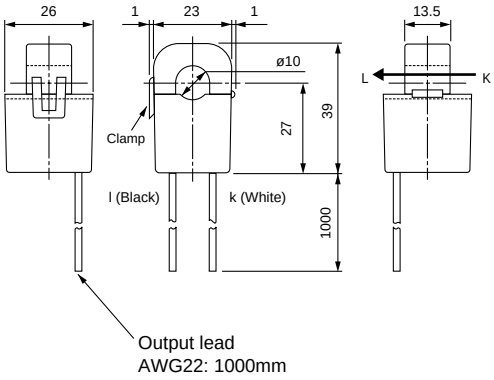


• **CC2D65**

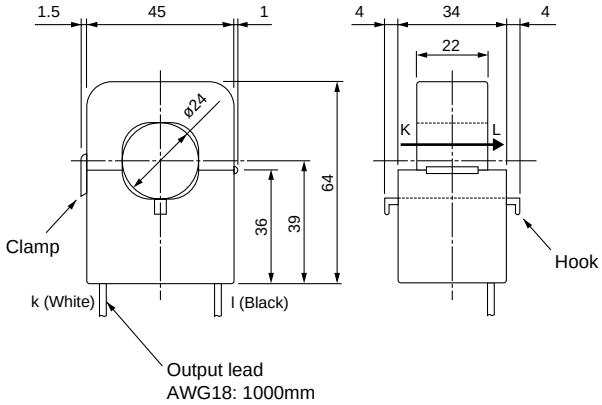


• **CC2D54, CC2D74**

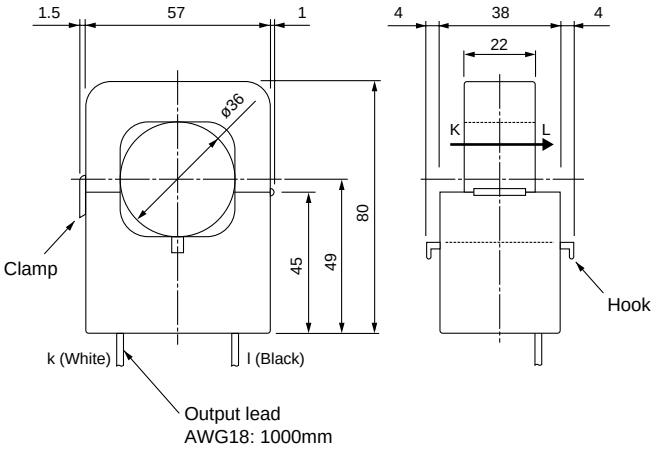

# Modified Products

## Miniature control relays / HH52, HH54 series

### Change in external terminals

• **Standard**
Plug-in mounting: HH54P, HH54PW, HH52P-R
Flange mounting: HH54S, HH54SW, HH52S-R

• **High capacity**
Plug-in mounting: HH54PU
Flange mounting: HH54SU

• **With extra pick-up coil**
Plug-in mounting: HH54-2P
Flange mounting: HH54-2S

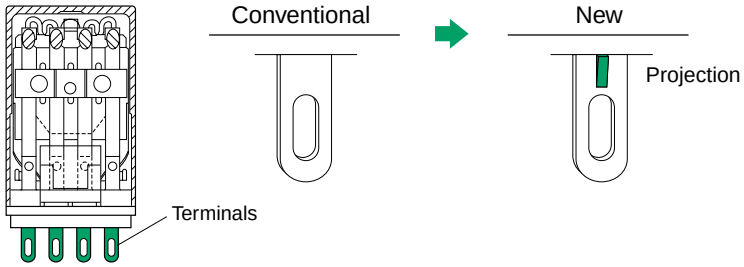


■ Time of modification: April 2004

## Miniature control relays / Sockets for rail mounting

### Changes in company logo of sockets

• **Screw terminal M3**
TP58X1: For HH52P
TP514X1: For HH54P

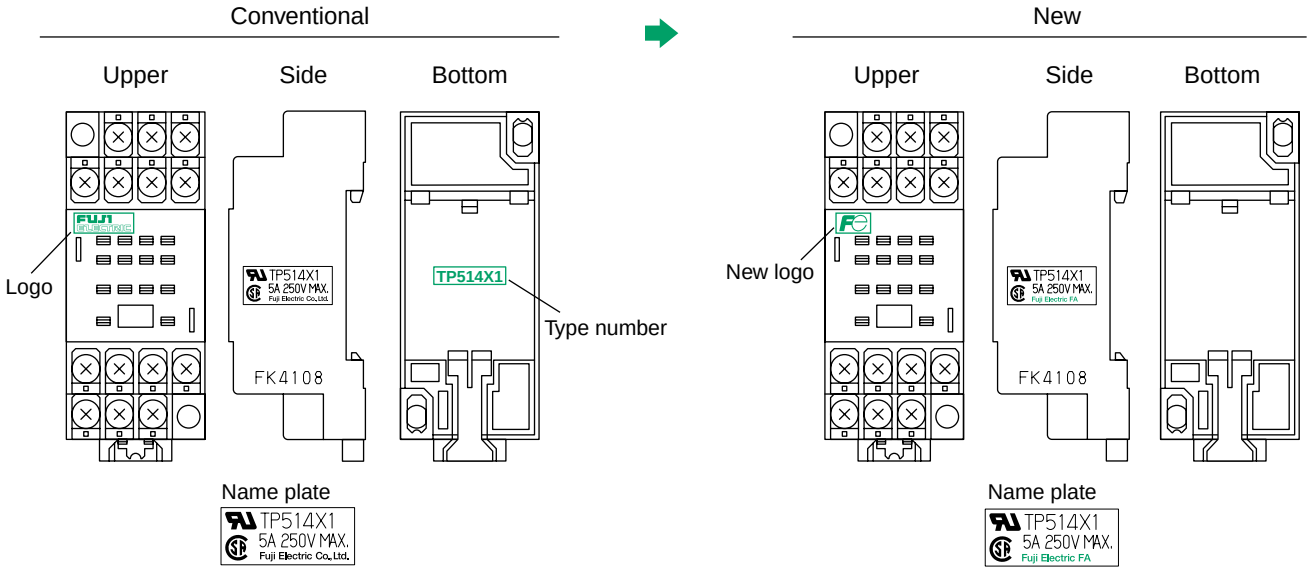


■ Time of modification: May 2004

# Display lights and multi display lights

## Change in shape of mounting kit APX111

Conventional → New

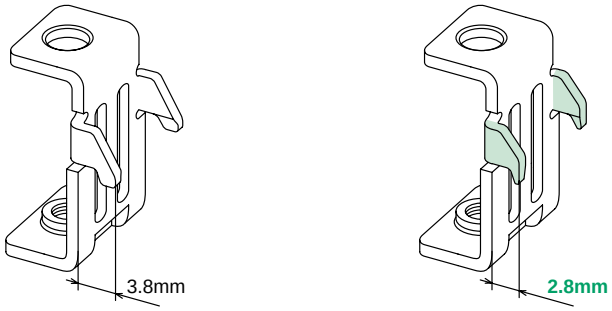


■ Time of modification: February 2004

# Manual motor starters / BM3 series

## Change in nameplates on right side

- **32AF types:** BM3RSB
  BM3RHB
  BM3RHBK
- **63AF types:** BM3VSB
  BM3VHB
  BM3VHBK

Conventional → New

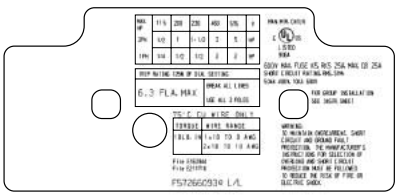

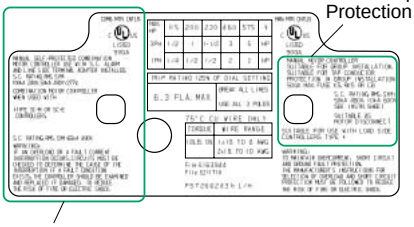


■ Time of modification: April 2004

# Discontinued Products

The production of the following products has or will soon be discontinued.
Please use substituting models.

## AS-Interface Waterproof connector-type slave module FM6D, FM6B

| | Discontinued | Substitute |
|---|---|---|
| • Slaves | | |
| 4-input (NPN) | FM6D-40XXN | **FM6D1-40XXN** |
| 4-output (NPN) | FM6D-04TNX | **FM6D1-04TNX** |
| 2-input/2-output (NPN) | FM6D-22TNN | **FM6D1-22TNN** |
| • Slave bases | | |
| Pressure welding connection | FM6B-04FK | **FM6B1-04FK** |
| | FM6B-04FE | **FM6B1-04FE** |
| Screw terminal connection | FM6B-04PG | **None** |
| | FM6B-04PE | **None** |

■ Time of discontinuation: March 2004

Further Information *Contact FUJI for details of substituting models.*

## AS-Interface Power supply FP1B-JNW213

| | Discontinued | Substitute |
|---|---|---|
| • For communications/external aux. power supply | FP1B-JNW213 | **None** |

■ Time of discontinuation: February 2004

## AS-Interface DeviceNet/AS-i gateway FC2L-DL

| | Discontinued | Substitute |
|---|---|---|
| • Conversion capsule | FC2L-DL (Version2.0) | **FC2LA-DL** (Version2.1) |

Hardware and software are compatible.

■ Time of discontinuation: March 2004

Further Information *Contact FUJI for details of substituting models.*

## ⚠ Safety Considerations

- For safe operation, before using the product read the instruction manual or user manual that comes with the product carefully or consult the Fuji sales representative from which you purchased the product.
- Products introduced in this catalog have not been designed or manufactured for such applications in a system or equipment that will affect human bodies or lives.
- Customers, who want to use the products introduced in this catalog for special systems or devices such as for atomic-energy control, aerospace use, medical use, passenger vehicle, and traffic control, are requested to consult the Fuji sales division.
- Customers are requested to prepare safety measures when they apply the products introduced in this catalog to such systems or facilities that will affect human lives or cause severe damage to property if the products become faulty.
- For safe operation, wiring should be conducted only by qualified engineers who have sufficient technical knowledge about electrical work or wiring.


**Fuji Electric FA Components & Systems Co., Ltd.**

Gate City Ohsaki, East Tower
11-2, Osaki 1-chome, Shinagawa-ku, Tokyo, 141-0032, Japan

Phone: +81-3-5435-7135~8
Fax: +81-3-5435-7456~9
URL http://www.fujielectric.co.jp/fcs/eng



Printed on 100% recycled paper using soy-based ink





Printed in Japan 2004-3 L25 FIS