DELTA ELECTRONICS, INC.

FHS-A9015S00

Application:

Intel Nehalem LGA1156 (45nm) & Intel Sandy Bridge LGA1155 (32nm)

Picture:

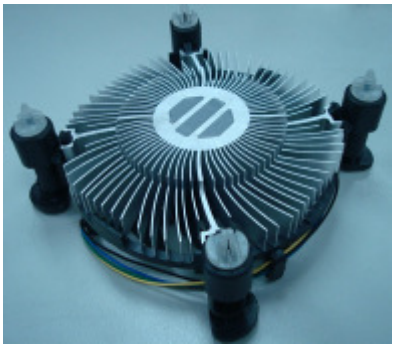

Thermal & Mechanical Spec

Thermal performance for 45 W CPU
HSK Assembly Weight: 120 g (ref.)
Clipping Force: 16 Kgf (ref.)

Component Specification:

1. Heat Sink
   Type: Thermal Shrink
   Material: Aluminum A6063
   Dimension: 90*90*30 mm
2. Thermal interface material
   Material: Dow Corning TC-1996 or Equivalent.
3. Fan
   (90x90x17 mm with Thermistor & PWM Control)
   Rated Voltage: 12 V
   Life Time:
   Superflo bearing 50000 hrs
   Connector:
   a. Lead wire: UL 10368 -F- AWG#28
      pin 1: black wire--------(-)
      pin 2: yellow wire----------(+)
      pin 3: green wire---------(F00)
      pin 4: blue wire----------(PWM)
   b. Housing: Molex 47054-1000 or equivalent
   c. Terminal: Molex 2759T 08-50-0113 or equivalent

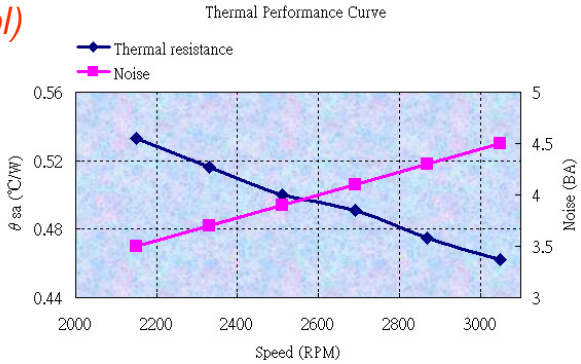

* All readings are typical values at rated voltage.
* Specifications are subject to change without notice

DELTA ELECTRONICS, INC.
252, Shang Ying Road, Kuei San
TAOYUAN SHIEN 333,
TAIWAN,R.O.C.
TEL: 886-3-3591968 EXT 2073
FAX: 886-3-3591991

DELTA PRODUCTS CORPORATION
4405 CUSHING PARKWAY
FREMONT, CA 94538, U.S.A.
TEL: 1-510-668-5100
FAX: 1-510-668-0680

DELTA ELECTRONICS(JAPAN), INC.
DELTA SHIBADAIMON BLDG.
2-1-14 SHIBADAIMON, MINATO-KU,
TOKYO, 105-0012, JAPAN
TEL: 81-3-5733-1111
FAX: 81-3-5733-1211

DELTA ELECTRONICS EUROPE LTD.
WEGALAAN 16,
2132 JC HOOFDDORP,
THE NETHERLANDS
TEL: 31-23-566-8989
FAX: 31-23-5668910

Date: July-2009

Delta Electronics Corp.

APPROVAL SHEET

Customer Name： _____

Model Name： **COOLER**

Model Name： **FHS-A9015S00**

Customer Part No： _____

Spec Issue Date： **2011/11/25**

Spec Revision： **00**

PLEASE SEND ONE COPY OF THIS SPECIFICATION BACK AFTER YOU SIGNED APPROVAL FOR PRODUCTION PRE-ARRANGMENT.

Approved By: _____

Date: _____

Approval	Check	Designer
Alex-Hsia	Charles. Chen	REEK.LI

Delta Electronics Corp.

CONTENTS

Delta Electronics Corp.

REV.	Description	Drawn	Checked	Approved	Issue Date
00	**ISSUE SPEC**	REEK.LI 2011/11/25	Charles. Chen 2011/11/25	Alex-Hsia 2011/11/25	2011/11/25

Description:

SAMPLE REVISION CODE LIST

Part No.	REV
DELTA MODEL : FHS-A9015S00	TOTAL **27** PAGE / 00

Delta Electronics Corp.

1. SPECIFICATION

Characters

Item	Description
Scope	THIS SPECIFICATION DEFINES THE ELECTRICAL AND MECHANICAL CHARACTERISTICS OF THE HEATSINK
Application	INTEL CPU COOLER
Specification	
a: thermal Resistance	0.52 (℃/W) (REF.)
b: total weight	120 g (REF.)
c: clip force	16 kgf (REF.)

BOM

Item	Part Name	Material	Part NO.	Q'TY	Remark
1	Heatsink	A6063-T5	3346771500	1 pce	
2	FASTENER CAP	PC	3470415400	4 pce	
3	FASTENER BASE	PC	3470415500	4 pce	
4	LABEL	PE	3267128700	1 pce	
5	FAN	PBT	3622920411	1 pce	
6	TIM	DOW TC-1996	4021101500	0.15g	

2. PRINT

Assembly Drawing

DRAWING:

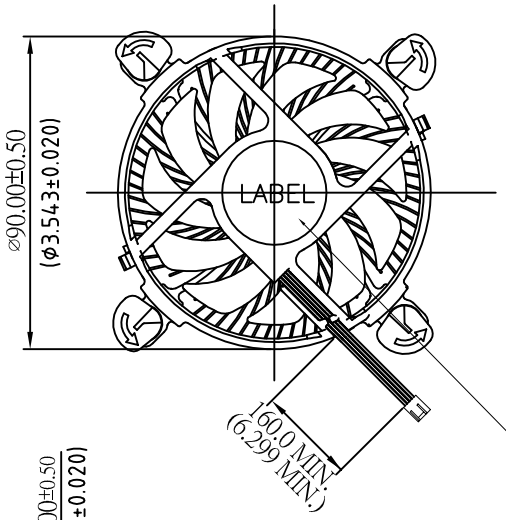

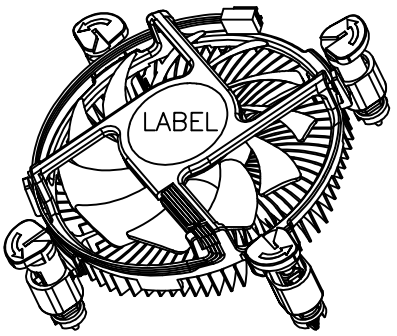

FAN LABEL P/N:3267128700

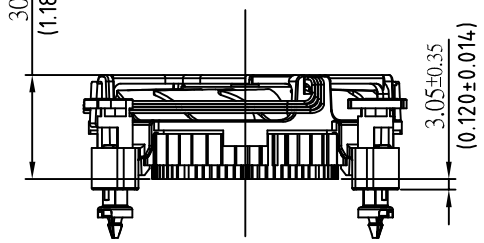

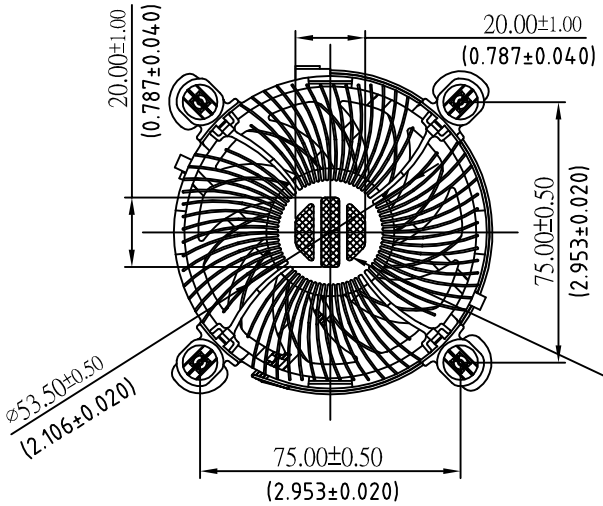

Dow Corning TC-1996 P/N:4021101500

*STENCIL THICKNESS=0.18(TYP.) 0.20(MAX.)

TIM WEIGHT ON HSK MUST BE 140mg+/-30mg

UNIT: mm / (INCH)

*NOTE: PLEASE ATTENTION FAN LABEL ORIENTATION.

台達電子工業股份有限公司 DELTA ELECTRONICS, INC.	DELTA MODEL: FHS-A9015S00	Drawn: REEK.LI 11/24'11	
THESE DRAWINGS AND SPECIFICATIONS ARE THE PROPERTY OF DELTA ELECTRONICS, INC. AND SHALL NOT BE REPRODUCED OR USED AS THE BASIS FOR THE MANUFACTURE OR SELL OF APPARATUSES OR DEVICES WITHOUT PERMISSION.	CUSTOMER NAME: STD		
	CUSTOMER P/N: ---		
DIMENSIONAL TOLERANCES HOLES : ±0.05 ANGLES : ±0.5°	THIRD ANGLE PROJECTION	Description: PRODUCTION SPEC. (PHYSICAL DIMENSION)	
( ) <30 :±0.25 >30~100 :±0.35 >100~300 :±0.5 ABOVE 300 :±0.8	( ) DECIMALS X :±0.3 X.X :±0.2 X.XX :±0.1	( ) UP~100 :±0.2 100~150 :±0.25 150~200 :±0.3 200~250 :±0.35 250~300 :±0.4 300~350 :±0.45 350~400 :±0.5	( ) UP~600 :±1.5 600~900 :±2.4 900~OVER :±3.1
A4 SIZE	Part No. FHS-A9015S00-PD		REV. 00
SCALE --- UNIT mm USED ON COOLER	SHEET 1 OF 2	ISSUE DATE:	

FRAME NAME : DF-PSLA4V-3R01.DWG

DATECODE POSITION
TYPE: WHITE INK

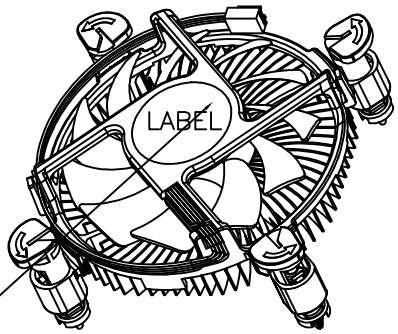

DATECODE POSITION

NOTE:

1. DATECODE ON FAN LABEL.
2. PLEASE REFER TO CP10S-00345 WHILE PRINTING DATECODE.

UNIT: mm / (INCH)

台達電子工業股份有限公司
DELTA ELECTRONICS, INC.

DIMENSIONAL TOLERANCES HOLES : ±0.05 ANGLES : ±0.5°

( )		( )		( )				( )	
<30	:±0.25	DECIMALS		UP~100	:±0.2	250~300	:±0.4	UP~600	:±1.5
>30~100	:±0.35	X	:±0.3	100~150	:±0.25	300~350	:±0.45	600~900	:±2.4
>100~300	:±0.5	X.X	:±0.2	150~200	:±0.3	350~400	:±0.5	900~OVER	:±3.1
ABOVE 300	:±0.6	X.XX	:±0.1	200~250	:±0.35				

SCALE	---	UNIT	mm	USED ON	COOLER

DELTA MODEL: FHS-A9015S00		Drawn: REEK.LI 11/24'11	
CUSTOMER NAME: STD			
CUSTOMER P/N: ---			
THIRD ANGLE PROJECTION	Description: PRODUCTION SPEC. (PHYSICAL DIMENSION)		
A4 SIZE	Part No. FHS-A9015S00-PD		REV. 00
	SHEET 2 OF 2	ISSUE DATE:	

FRAME NAME : DF-PSLA4V-3R01.DWG

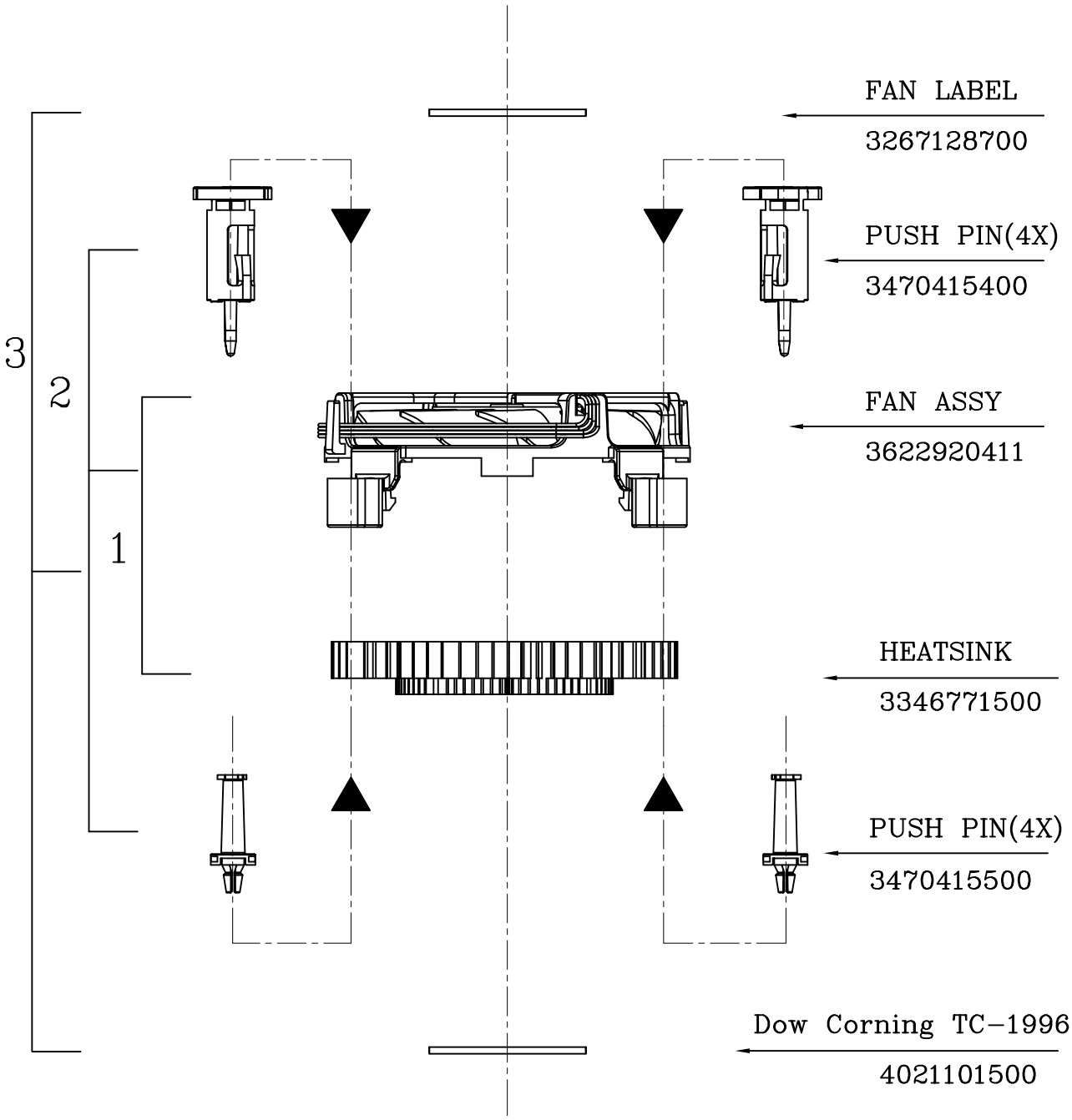

台達電子工業股份有限公司
DELTA ELECTRONICS, INC.

DIMENSIONAL TOLERANCES HOLES : ±0.05 ANGLES : ±0.5°

( )		( )		( )				( )	
<30	:±0.25	DECIMALS		UP~100	:±0.2	250~300	:±0.4	UP~600	:±1.5
>30~100	:±0.35	X	:±0.3	100~150	:±0.25	300~350	:±0.45	600~900	:±2.4
>100~300	:±0.5	X.X	:±0.2	150~200	:±0.3	350~400	:±0.5	900~OVER	:±3.1
ABOVE 300	:±0.6	X.XX	:±0.1	200~250	:±0.35				

SCALE	---	UNIT	mm	USED ON	COOLER

DELTA MODEL: FHS-A9015S00

Drawn: 李釗慶 11/24'11

CUSTOMER NAME: STD

CUSTOMER P/N: ---

THIRD ANGLE PROJECTION

A4 SIZE

Description: PRODUCTION SPEC. (ASSEMBLY ORDER)

Part No. FHS-A9015S00-AS

REV. 00

SHEET 1 OF 1

ISSUE DATE:

FRAME NAME : DF-PSLA4V-3R01.DWG

Delta Electronics Corp.

Parts Drawing

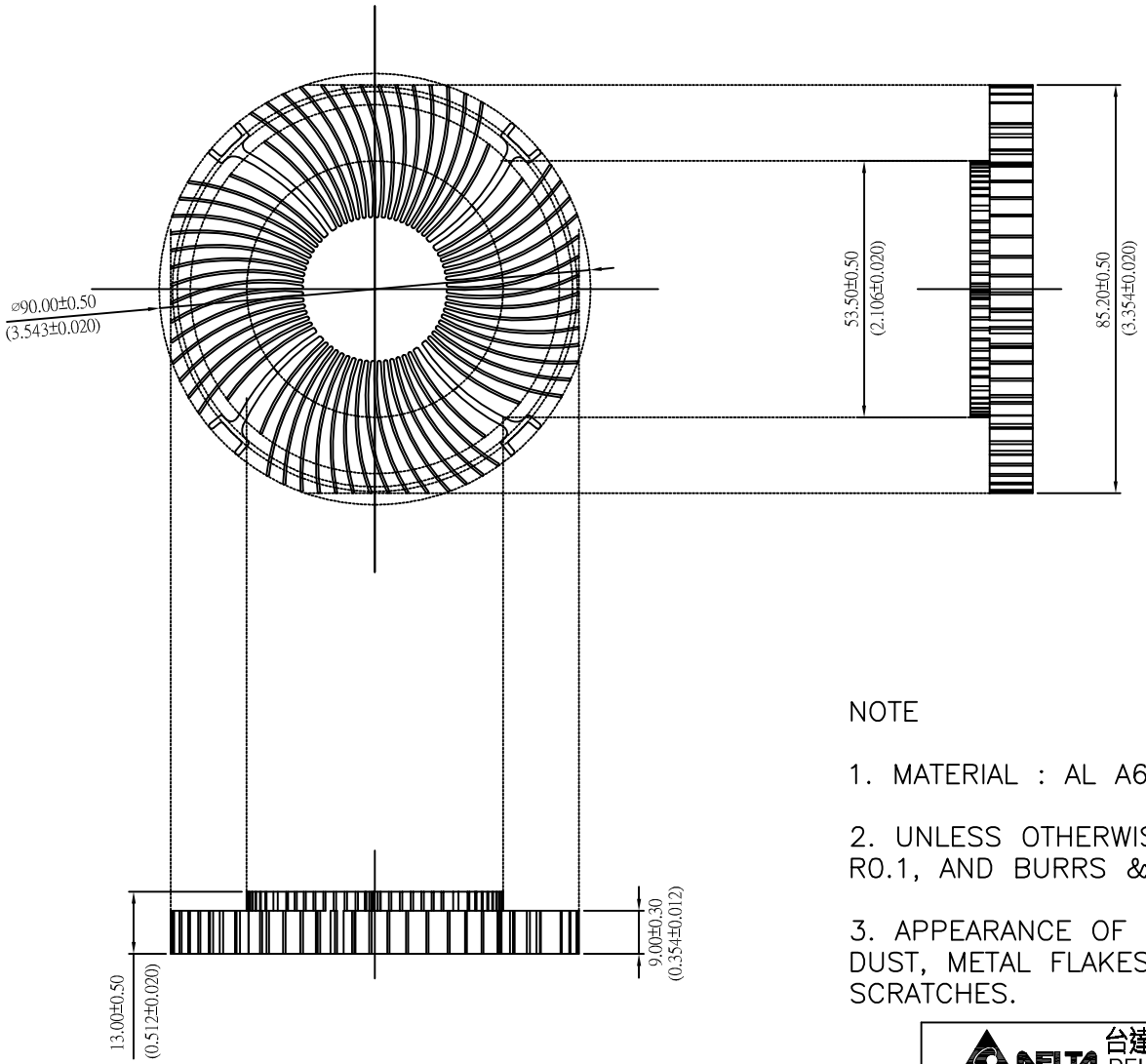

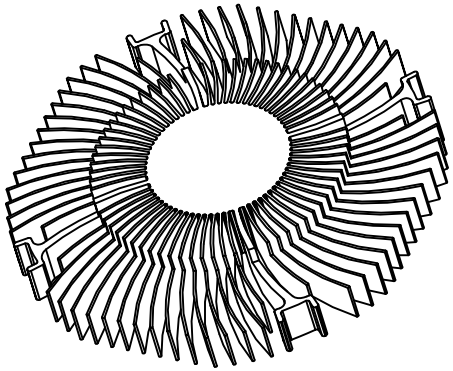

NOTE

1. MATERIAL : AL A6063 T5

2. UNLESS OTHERWISE SPECIFIED – ALL ROUNDS & FILLETS R0.1, AND BURRS & SHARP EDGES TO BE WITHIN 0.1.

3. APPEARANCE OF SURFACES TO BE UNIFORM, AND FREE OF DUST, METAL FLAKES, ADHESIVES, OIL, BLEMISHES AND SCRATCHES.

台達電子工業股份有限公司
DELTA ELECTRONICS, INC.

THIRD ANGLE PROJECTION

DIMENSIONAL TOLERANCES

HOLES : ±0.05 ANGLES : ±0.5°

( )		(√) DECIMALS		( )		( )	
<30	±0.25	X	±0.5	UP~100	±0.2	250~300	±0.4	UP~600	±1.5
>30~100	±0.35	X.X	±0.3	100~150	±0.25	300~350	±0.45	600~900	±2.4
>100~300	±0.5	X.XX	±0.3	150~200	±0.3	350~400	±0.5	900~OVER	±3.1
ABOVE 300	±0.6	X.XX	±0.25	200~250	±0.35				

A3 SIZE

SCALE	1/1	UNIT	mm	USED ON	COOLER

Drawn: REEK.LI 8/31'10

DESCRIPTION: HEATSINK

PART NO.: 3346771500

REV. 00

SHEET 2 OF 2

DF-MEA3H-4R00

FAN SPECIFICATION	
FAN TYPE	LINEARLY VARIABLE, DC BRUSHLESS MOTOR
OPERATING VOLTAGE	13.2V MAX, 12V RATED, 10.8V MIN
CURRENT	AVERAGE : 0.15A
	MAXIMUM : 0.46A
	STARTING : 0.73A
SPEED AT STEADY STATE	3100 RPM ± 10%
OPERATING TEMPERATURE	0°C TO +70°C
OPERATING HUMIDITY	85% RELATIVE HUMIDITY @ 55°C
PROTECTION	LOCKED ROTOR, POLARITY
BEARING TYPE	SUPERFLO BEARING

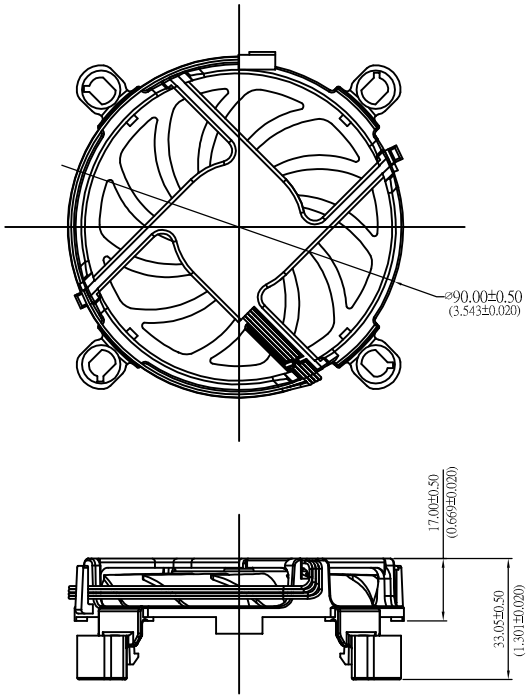

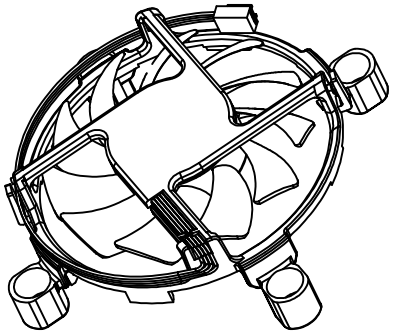

台達電子工業股份有限公司
DELTA ELECTRONICS, INC.

Drawn: REEK.LI 10/27'09

THIRD ANGLE PROJECTION

DESCRIPTION: FAN

DIMENSIONAL TOLERANCES

HOLES : ±0.05 ANGLES : ±0.5°

( )		(√)		( )				( )	
<30	±0.25	DECIMALS		UP~100	±0.2	250~300	±0.4	UP~600	±1.5
>30~100	±0.35	X	±0.5	100~150	±0.25	300~350	±0.45	600~900	±2.4
>100~300	±0.5	X.X	±0.2	150~200	±0.3	350~400	±0.5	900~OVER	±3.1
ABOVE 300	±0.6	X.XX	±0.1	200~250	±0.35				

A4 SIZE

PART NO.: 3622920411

REV. --

SCALE	1/1	UNIT	mm	USED ON	COOLER

SHEET 1 OF 1

DF-MEA3H-4R00

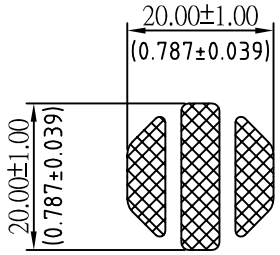

NOTES:
1. THICKNESS: 0.18mm
2. VENDOR P/N: DOW CORNING TC-1996
3. COLOR: GRAY.
4. THERMAL CONDUCTIVITY: 4.1 W/m-°C
5. THERMAL CONTACT RESISTANCE: 0.06 °C-cm²/W @40psi
6. GROSS WEIGHT: 140±30 mg
7. VENDOR : DOW CORNING
8. MUST MEET DELTA'S SPEC : 10000-0162

台達電子工業股份有限公司
DELTA ELECTRONICS, INC.

THIRD ANGLE PROJECTION

DIMENSIONAL TOLERANCES HOLES : ±0.05 ANGLES : ±0.5°

( )		(√) DECIMALS		( )				( )	
<30	±0.25	X	±0.5	UP~100	±0.2	250~300	±0.4	UP~600	±1.5
>30~100	±0.35	X.X	±0.2	100~150	±0.25	300~350	±0.45	600~900	±2.4
>100~300	±0.5	X.XX	±0.1	150~200	±0.3	350~400	±0.5	900~OVER	±3.1
ABOVE 300	±0.6			200~250	±0.35				

SCALE	1/1	UNIT	mm	USED ON	COOLER

A4 SIZE

Drawn: REEK.LI 10/27'09

DESCRIPTION: THERMAL INTERFACE

PART NO.: 4021101500

REV. --

SHEET 1 OF 1

DF-MEA3H-4R00

3. PACKING PLAN

Packing Specification

CARTON ILLUSTRATE	SIZE	530(L)*230(w)*315(H)(mm)	PACKING QUANTITY	5LAYERS/CARTON
	MATERIAL	3 LAYERS"AB" FLUTE	CARTON WEIGHT	0.62 kg (REF.)

CARTON OUTSIDE DEMONDTRATE

FRONT

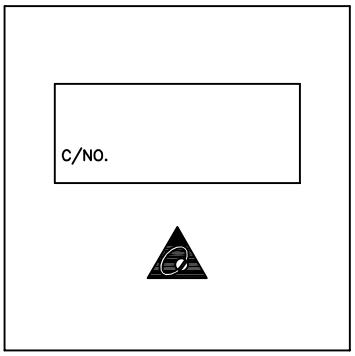

BACK

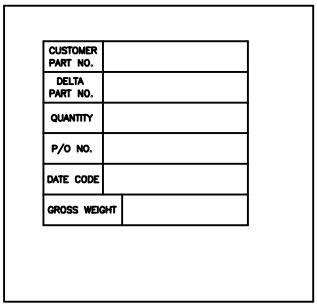

(ONE LABEL PER CARTON)

PET TRAY PACKING ILLUSTRATE	SIZE	94(L)*94(w)*30(H)(mm)	PACKING QUANTITY	1PCS/PET TRAY
	MATERIAL	PET TRAY		
	MATERIAL WEIGHT	6g (REF.)		

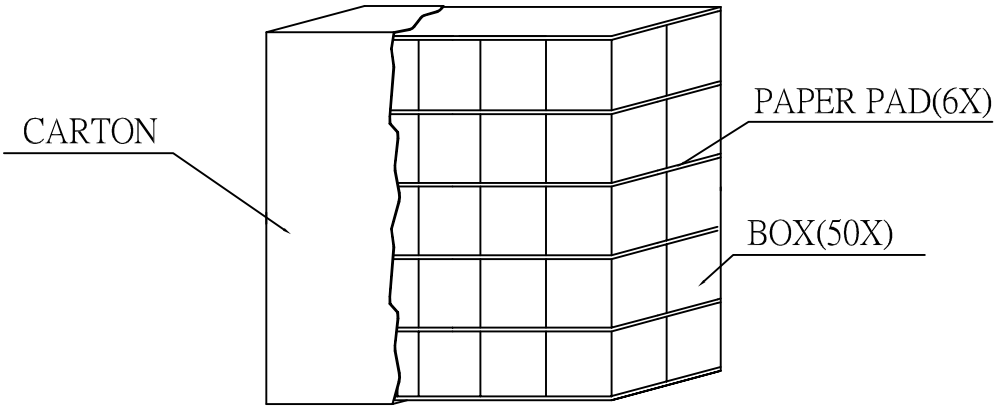

台達電子工業股份有限公司
DELTA ELECTRONICS, INC.

DIMENSIONAL TOLERANCES HOLES : ±0.05 ANGLES : ±0.5°

( )		( )		( )		( )	
<30	:±0.25	DECIMALS		UP~100	:±0.2	250~300	:±0.4	UP~600	:±1.5
>30~100	:±0.35	X	:±0.3	100~150	:±0.25	300~350	:±0.45	600~900	:±2.4
>100~300	:±0.5	X.X	:±0.2	150~200	:±0.3	350~400	:±0.5	900~OVER	:±3.1
ABOVE 300	:±0.6	X.XX	:±0.1	200~250	:±0.35				

SCALE	---	UNIT	mm	USED ON	COOLER

THIRD ANGLE PROJECTION

A4 SIZE

DELTA MODEL: FHS-A9015S00	Drawn: REEK.LI 11/25'11
CUSTOMER NAME: STD	
CUSTOMER P/N: ---	
Description: PRODUCTION SPEC. (PACKING ASSMEBLY)	
Part No. FHS-A9015S00-PA	REV. --
SHEET 1 OF 2	ISSUE DATE:

PART NO.	FHS-A9015S00			
BASIC DATA	QUANTITY /CARTON	50PCS (5 LAYERS/CARTON, 10PCS/LAYER)		
	PRODUCTION NET WEIGHT	7.8kg (REF.)		
	PRODUCTION GROSS WEIGHT	9.8kg (REF.)		
20(ft)CONTAINER ILLUSTRATE	SIZE	5.889(L)*2.352(w)*2.386(H)m	PACKING QUANTITY	10PALLETS/CONTAINER
	CONTAINER	STEEL		

CONTAINER FORM

CONTAINER LOADING MATHOD

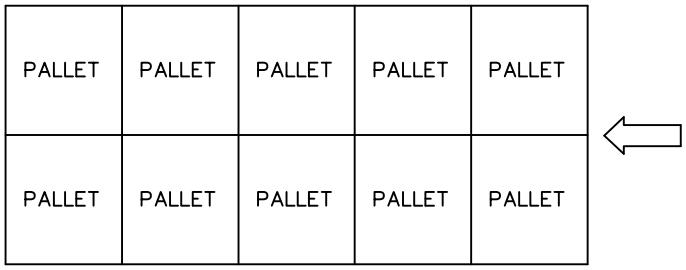

TOP VIEW

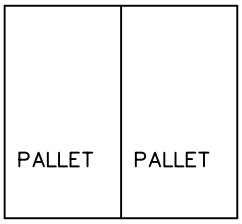

FRONT VIEW

PALLET LOADING ILLUSTRATE	SIZE	117(L)*107(w)*13(H)cm	PACKING QUANTITY	50 CARTONS/PALLET
	PALLET	WOOD		

PALLET ILLUSTRATE

PALLET LOADING MATHOD

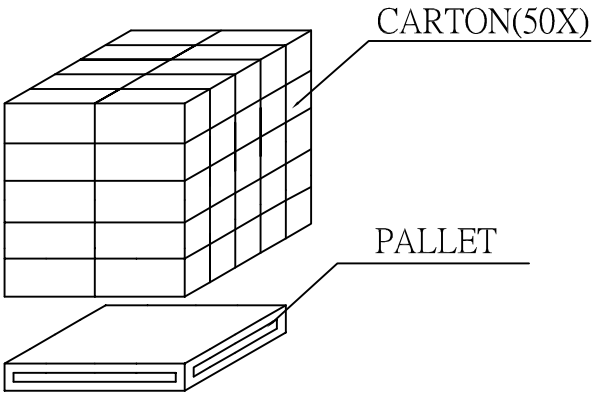

台達電子工業股份有限公司
DELTA ELECTRONICS, INC.

DIMENSIONAL TOLERANCES HOLES : ±0.05 ANGLES : ±0.5°

( )		( )		( )		( )	
<30	:±0.25	DECIMALS		UP~100	:±0.2	250~300	:±0.4	UP~600	:±1.5
>30~100	:±0.35	X	:±0.3	100~150	:±0.25	300~350	:±0.45	600~900	:±2.4
>100~300	:±0.5	X.X	:±0.2	150~200	:±0.3	350~400	:±0.5	900~OVER	:±3.1
ABOVE 300	:±0.6	X.XX	:±0.1	200~250	:±0.35				

SCALE	---	UNIT	mm	USED ON	COOLER

DELTA MODEL: FHS-A9015S00	Drawn: REEK.LI 11/25'11	
CUSTOMER NAME: STD		
CUSTOMER P/N: ---		
THIRD ANGLE PROJECTION	Description: PRODUCTION SPEC. (PACKING ASSMEBLY)	
A4 SIZE	Part No. FHS-A9015S00-PA	REV. --
	SHEET 2 OF 2	ISSUE DATE:

4. FAN

SPECIFICATION FOR APPROVAL

Customer T M P B U

Description D C F A N

Part No. _____ R E V. _____

Delta Model No. AUC0912D-AF1F REV. 00

Sample Issue No. _____

Sample Issue Date SEP.15.2010

PLEASE SEND ONE COPY OF THIS SPECIFICAITON BACK AFTER YOU SIGNED APPROVAL FOR PRODUCTION PRE-ARRANGMENT.

APPROVED BY: _____

DATE : _____

DELTA ELECTRONICS, INC.
TAOYUAN PLANT
252, SHANG YING ROAD, KUEI SAN INDUSTRIAL ZONE
TAOYUAN SHIEN, TAIWAN, R.O.C.
TEL:886-(0)3-3591968
FAX:886-(0)3-3591991

DELTA ELECTRONICS, INC.
252, SHANG YING ROAD, KUEI SAN
TAOYUAN HSIEN 333, TAIWAN, R. O. C.
TEL : 886-(0)3-3591968
FAX : 886-(0)3-3591991

SPECIFICATION FOR APPROVAL

****

Customer: TMPBU

Description: DC FAN

Customer P/N: REV:

Delta Model NO.: AUC0912D-AF1F Delta Safety Model NO.: N/A

Sample Rev: 00 Issue NO:

Sample Issue Date: SEP.15.2010 Quantity:

1. SCOPE:

THIS SPECIFICATION DEFINES THE ELECTRICAL AND MECHANICAL CHARACTERISTICS OF THE DC BRUSHLESS AXIAL FLOW FAN. THE FAN MOTOR IS WITH SINGLE PHASE AND FOUR POLES.

2. CHARACTERS:

ITEM	DESCRIPTION
RATED VOLTAGE	12.0 VDC
OPERATION VOLTAGE	10.8 - 13.2 VDC
INPUT CURRENT	0.15 (MAX. 0.22) A (SAFETY CURRENT 0.46 A)
INPUT POWER	1.80 (MAX. 2.64) W
SPEED (FAN ONLY)	3100±10% R.P.M.
SPEED (FAN ON SINK)	3100±10% R.P.M.
MAX. AIR FLOW (FAN ONLY) (AT ZERO STATIC PRESSURE)	0.643 (MIN. 0.578) M^3/MIN. 22.68 (MIN. 20.41) CFM
MAX. AIR PRESSURE (FAN ONLY) (AT ZERO AIRFLOW)	1.66 (MIN. 1.34) mmH_2O 0.065 (MIN. 0.053) $inchH_2O$
ACOUSTICAL NOISE(ON SINK AVG.)	32.6 (MAX. 36.6) dB-A
INSULATION TYPE	UL: CLASS A

(continued)

PART NO:

DELTA MODEL: AUC0912D-AF1F

INSULATION STRENGTH	10 MEG OHM MIN. AT 500 VDC (BETWEEN FRAME AND (+) TERMINAL)
DIELECTRIC STRENGTH	5 mA MAX. AT 500 VAC 50/60 Hz ONE MINUTE, (BETWEEN FRAME AND (+) TERMINAL)
EXTERNAL COVER	OPEN TYPE
LIFE EXPECTANCE	80,000 HOURS CONTINUOUS OPERATION AT 45 °C WITH 15 ~ 65 %RH.
ROTATION	CLOCKWISE VIEW FROM NAME PLATE SIDE
OVER CURRENT SHUT DOWN	THE CURRENT WILL SHUT DOWN WHEN LOCKING ROTOR.
LEAD WIRE	UL 10368 -F- AWG #28 BLACK WIRE NEGATIVE(-) YELLOW WIRE POSITIVE(+) GREEN WIRE FREQUENCY(-F00) BLUE WIRE SPEED CONTROL(PWM)

NOTES:
1. ALL READINGS ARE MEASURED AFTER STABLY WARMING UP THROUGH 10 MINUTES.
2. THE VALUES WRITTEN IN PARENS , ( ), ARE LIMITED SPEC.
3. ACOUSTICAL NOISE MEASURING CONDITION:

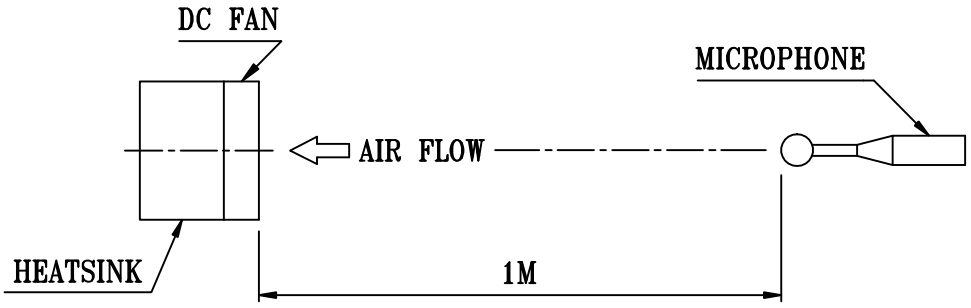

NOISE IS MEASURED AT RATED VOLTAGE IN FREE AIR IN ANECHOIC CHAMBER WITH B & K SOUND LEVEL METER WITH MICROPHONE AT A DISTANCE OF ONE METER FROM THE FAN INTAKE.

PART NO:

DELTA MODEL: AUC0912D-AF1F

3. MECHANICAL:

3-1. DIMENSIONS ---------- SEE DIMENSIONS DRAWING

3-2. FRAME ---------- PLASTIC UL: 94V-0

(THE CONTACT OF HALOGEN LESS THAN 1500 PPM FOR USING EDX ...ETC)

3-3. IMPELLER ---------- PLASTIC UL: 94V-0

(THE CONTACT OF HALOGEN LESS THAN 1500 PPM FOR USING EDX ...ETC)

3-4. BEARING SYSTEM ---------- SUPERFLO BEARING

3-5. WEIGHT ---------- 55 GRAMS

4. ENVIRONMENTAL:

4-1. OPERATING TEMPERATURE ---------- 0 TO +70 DEGREE C

4-2. STORAGE TEMPERATURE ---------- -30 TO +85 DEGREE C

4-3. OPERATING HUMIDITY --- 85% RELATIVE HUMIDITY WITH 55 DEGREE C

4-4. STORAGE HUMIDITY ---------- 5 TO 95 % RH

5. PROTECTION:

5-1. LOCKED ROTOR PROTECTION

IMPEDANCE OF MOTOR WINDING PROTECTS MOTOR FROM FIRE IN 96

5-2. POLARITY PROTECTION

HOURS OF LOCKED ROTOR CONDITION AT THE RATED VOLTAGE.
BE CAPABLE OF WITHSTANDING IF REVERSE CONNECTION FOR POSITIVE AND NEGATIVE LEADS.

6. RE OZONE DEPLETING SUBSTANCES:

6-1. NO CONTAINING PBBs, PBBOs, CFCs, PBBEs, PBDPEs AND HCFCs.

7. PRODUCTION LOCATION

7-1. PRODUCTS WILL BE PRODUCED IN CHINA OR THAILAND OR TAIWAN.

PART NO:

DELTA MODEL: AUC0912D-AF1F

8. P & Q CURVE:

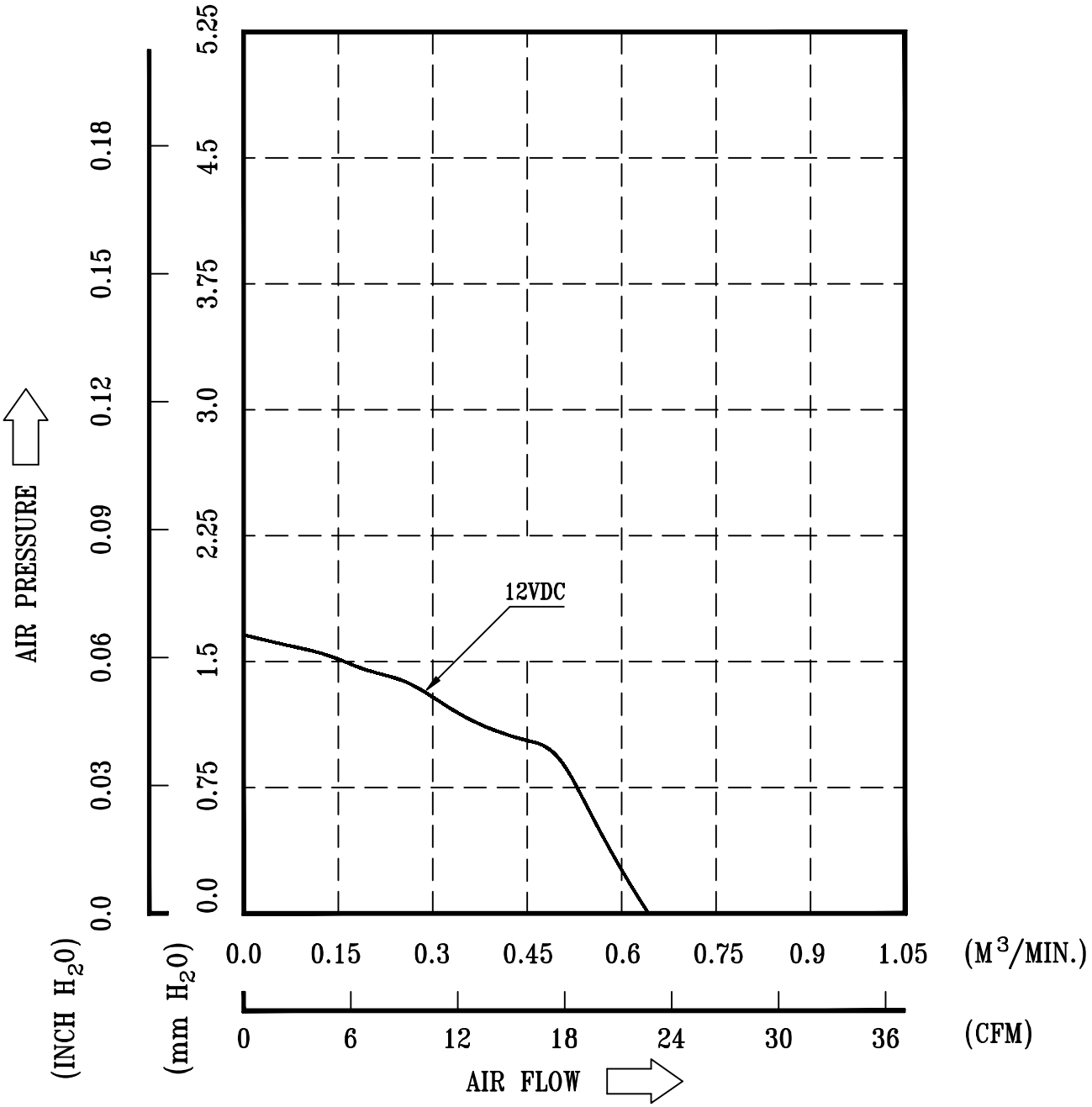

* TEST CONDITION: INPUT VOLTAGE ----- OPERATION VOLTAGE
TEMPERATURE ------ ROOM TEMPERATURE
HUMIDITY ---------- 65%RH

A00

PART NO:

DELTA MODEL: AUC0912D-AF1F

9. DIMENSION DRAWING:

LABEL:

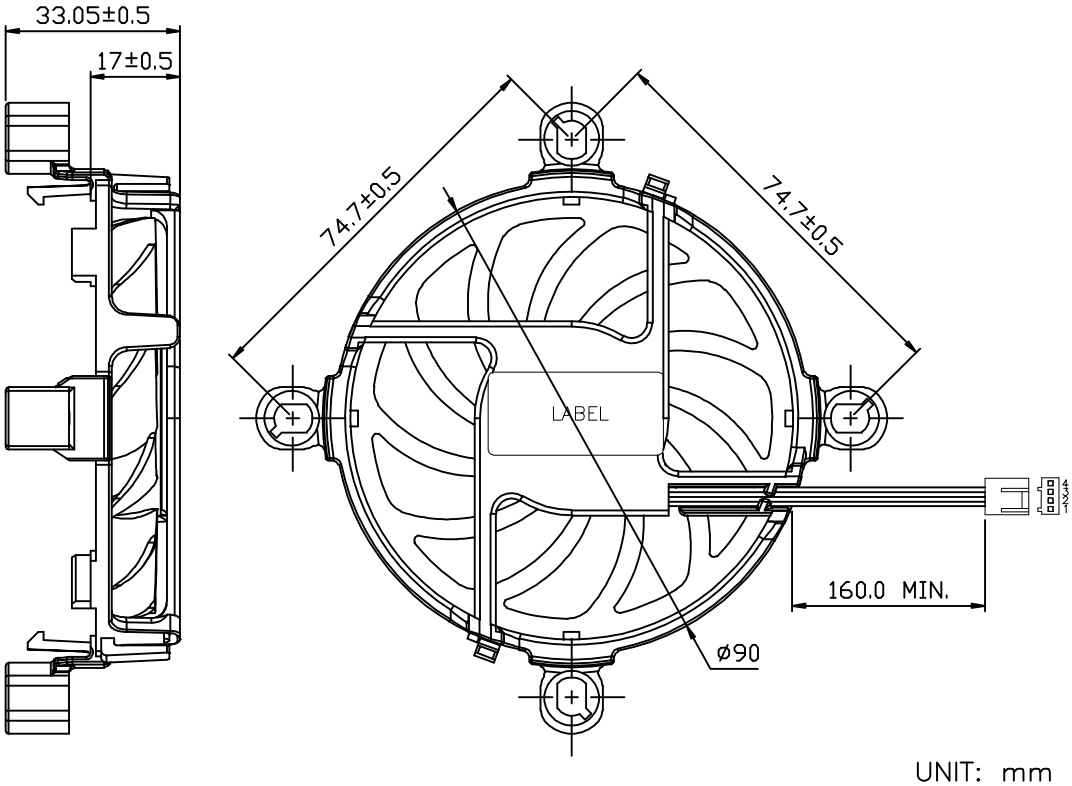

UNIT: mm

NOTE :

1. LEAD WIRE: UL 10368 -F- AWG #28
   PIN 1 : BLACK WIRE: NEGATIVE(-)
   PIN 2 : YELLOW WIRE: POSITIVE(+)
   PIN 3 : GREEN WIRE: TACHOMETER OUTPUT (F00)
   PIN 4 : BLUE WIRE: SPEED CONTROL (PWM)
2. HOUSING : MOLEX 47054-1000 OR EQUIVALENT
3. TERMINAL : MOLEX 2759T 08-50-0113 OR EQUIVALENT
4. THIS PRODUCT IS RoHS COMPLIANT
5. DELTA'S RESTRICTIONS ON HALOGEN APPLY ONLY TO BROMINATED AND CHLORINATED COMPOUNDS. NO OTHER HALOGEN IS RESTRICTED. SUBSTANCES RESTRICTIONS FOR HALOGEN-FREE (INCLUDE FAN PLASTIC PARTS, PWB BOARD, IC, ELECTRICAL MATERIALS & CABLE ASSY),
   a. BROMINE(Br) < 900 PPM,
   b. CHLORINE(Cl) < 900 PPM
   c. (Br) + (Cl) < 1500 PPM.

PART NO:

DELTA MODEL: AUC0912D-AF1F

10. FREQUENCY GENERATOR (FG) SIGNAL:

10-1. OUTPUT CIRCUIT - OPEN COLLECTOR MODE:

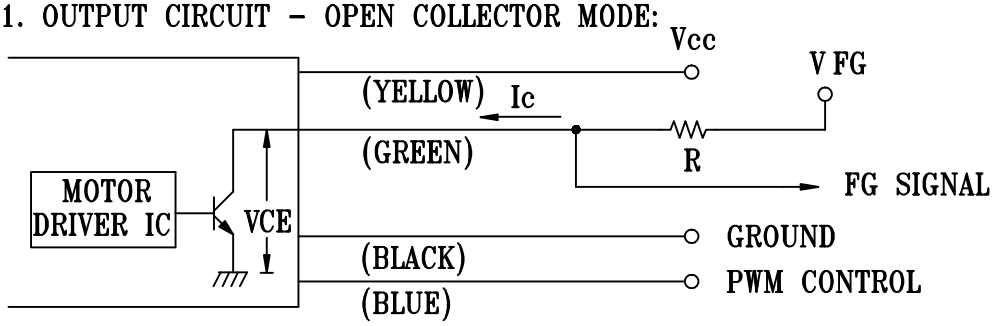

CAUTION: THE FG SIGNAL LEAD WIRE MUST BE KEPT AWAY FROM "+" LEAD WIRE & "-" LEAD WIRE.

10-2. SPECIFICATION:

V_{CE} (sat)=0.5V MAX. V_{FG} =5.0V TYP. (Vcc MAX.)

I_C =5mA MAX. $R \geq V_{FG}/I_C$

10-3. FREQUENCY GENERATOR WAVEFORM:

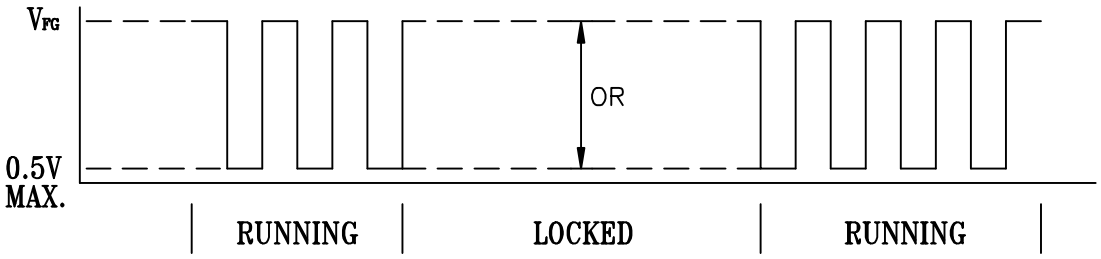

FAN RUNNING FOR 4 POLES

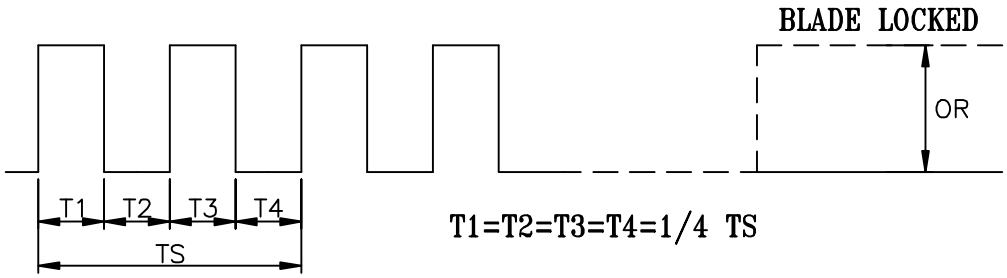

T1=T2=T3=T4=1/4 TS

N=R.P.M

TS=60/N(SEC)

*VOLTAGE LEVEL AFTER BLADE LOCKED

*4 POLES

11. PWM CONTROL SIGNAL:(FAN ON SINK)

11-1. SIGNAL VOLTAGE RANGE: 0~20 VDC

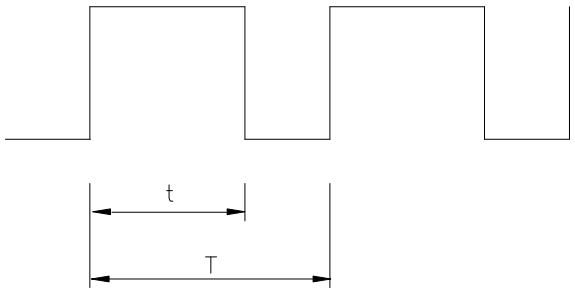

HIGH SIGNAL: 20 VDC MAX. 2.8 VDC MIN.

LOW SIGNAL: 0.8 VDC MAX. 0 VDC MIN.

DUTY CYCLE= $\frac{t}{T}$ *100(%)

- THE PREFERRED OPERATING POINT FOR THE FAN IS 25KHZ.
- AT 100% DUTY CYCLE,THE ROTOR WILL SPIN AT MAXIMUM SPEED.
- WITH CONTROL SIGNAL LEAD DISCONNECTED,THE FAN WILL SPIN AT MAXIMUM SPEED.

11-2. SPEED VS PWM CONTROL SIGNAL:
(AT 25°C, RATED VOLTAGE & PWM SIGNAL AS FOLLOW)

DUTY CYCLE (%)	SPEED R.P.M.	CURRENT (A) TYP.
100	3100±10%	0.15
0~20	1000±200	0.03

* PWM SIGNAL
PWM FREQUENCY = 25KHz

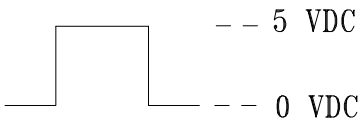

12. PWM CONTROL SIGNAL:(FAN ONLY)

12-1. SIGNAL VOLTAGE RANGE: 0~20 VDC

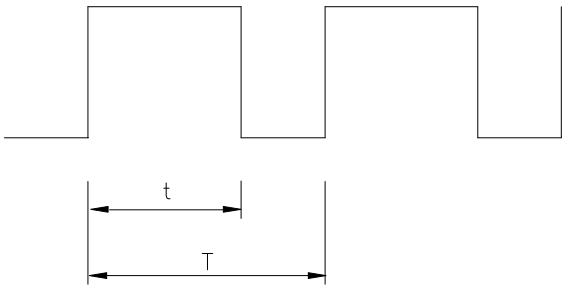

HIGH SIGNAL: 20 VDC MAX.
2.8 VDC MIN.

LOW SIGNAL: 0.8 VDC MAX.
0 VDC MIN.

DUTY CYCLE= $\frac{t}{T}$ *100(%)

- THE PREFERRED OPERATING POINT FOR THE FAN IS 25KHZ.
- AT 100% DUTY CYCLE,THE ROTOR WILL SPIN AT MAXIMUM SPEED.
- WITH CONTROL SIGNAL LEAD DISCONNECTED,THE FAN WILL SPIN AT MAXIMUM SPEED.

12-2. SPEED VS PWM CONTROL SIGNAL:
(AT 25°C, RATED VOLTAGE & PWM SIGNAL AS FOLLOW)

DUTY CYCLE (%)	SPEED R.P.M.	CURRENT (A) TYP.
100	3100±10%	0.15
0~20	1000±200	0.03

* PWM SIGNAL
PWM FREQUENCY = 25KHz

-- 5 VDC

-- 0 VDC

12-3. PWM CONTROL LEAD WIRE INPUT IMPEDANCE:

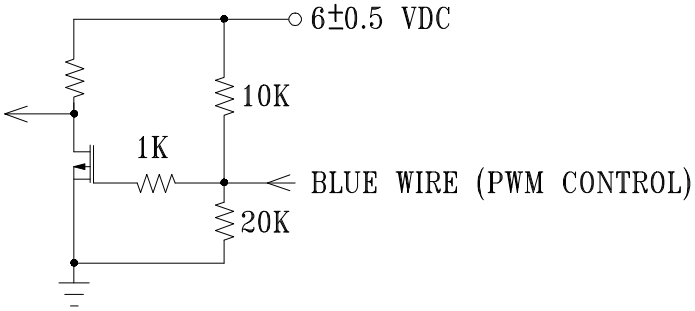

Application Notice

1. Delta will not guarantee the performance of the products if the application condition falls outside the parameters set forth in the specification.
2. A written request should be submitted to Delta prior to approval if deviation from this specification is required.
3. Please exercise caution when handling fans. Damage may be caused when pressure is applied to the impeller, if the fans are handled by the lead wires, or if the fan was hard-dropped to the production floor.
4. Except as pertains to some special designs, there is no guarantee that the products will be free from any such safety problems or failures as caused by the introduction of powder, droplets of water or encroachment of insect into the hub.
5. The above-mentioned conditions are representative of some unique examples and viewed as the first point of reference prior to all other information.
6. It is very important to establish the correct polarity before connecting the fan to the power source. Positive (+) and Negative (-). Damage may be caused to the fans if connection is with reverse polarity, if there is no foolproof method to protect against such error specifically mentioned in this spec.
7. Delta fans without special protection are not suitable where any corrosive fluids are introduced to their environment.
8. Please ensure all fans are stored according to the storage temperature limits specified. Do not store fans in a high humidity environment. We highly recommend performance testing is conducted before shipping, if the fans have been stored over 6 months.
9. Not all fans are provided with the Lock Rotor Protection feature. If you impair the rotation of the impeller for the fans that do not have this function, the performance of those fans will lead to failure.
10. Please be cautious when mounting the fan. Incorrect mounting of fans may cause excess resonance, vibration and subsequent noise.
11. It is important to consider safety when testing the fans. A suitable fan guard should be fitted to the fan to guard against any potential for personal injury.
12. Except where specifically stated, all tests are carried out at room (ambient) temperature and relative humidity conditions of 25°C, 65% RH. The test value is only for fan performance itself.
13. Be certain to connect an " 4.7µF or greater" capacitor to the fan externally when the application calls for using multiple fans in parallel, to avoid any unstable power.