P/N	APPLICABLE NOTE(S)
CC	1,2
CCSF	1,2

REVISIONS			
REV	DESCRIPTION	DATE	BY
A	ECO 19478	08.10.06	SLM
B	ECO 25054 (CHG TEMP RANGE)	11.4.11	YP

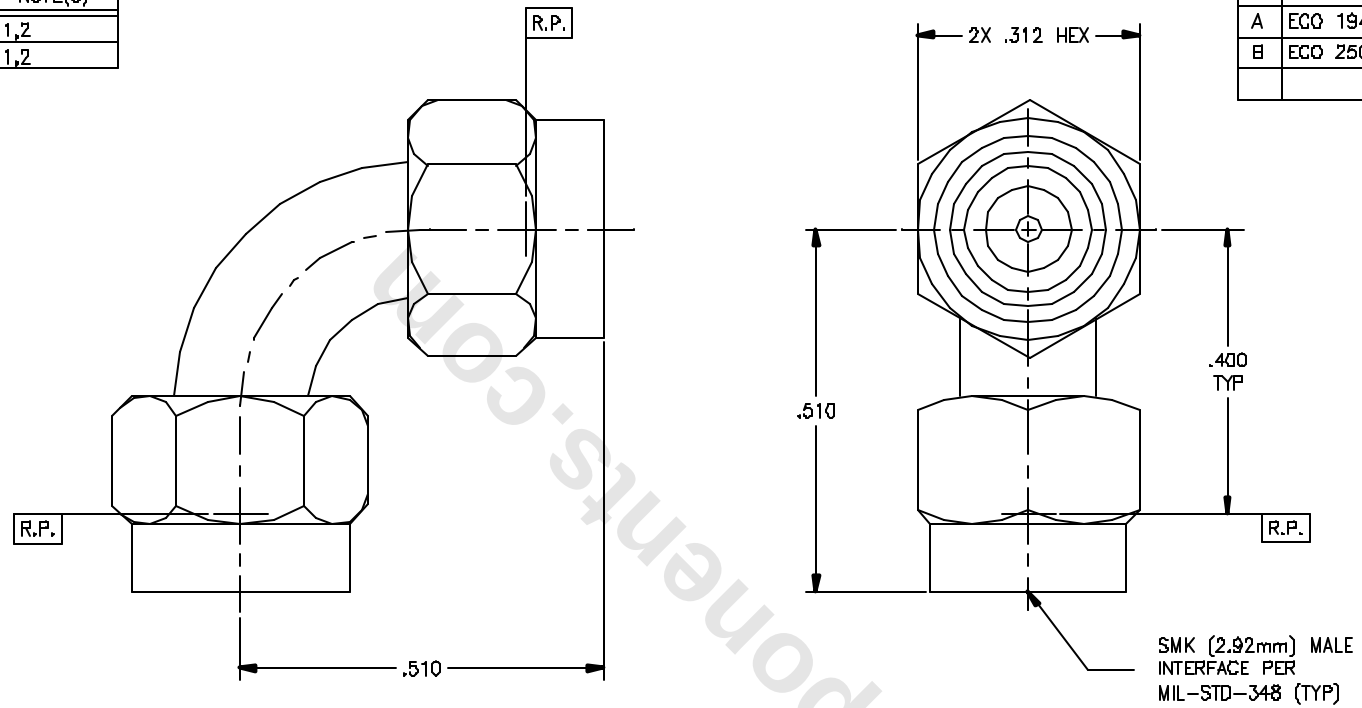

MATERIAL(S):

Body And Coupling Nut:
303 sst per ASTM A-582.
Center Conductor:
BeCu alloy per ASTM B-196.
Retaining Ring:
BeCu alloy per ASTM B-196
or ASTM B-197.
Dielectric:
PTFE per ASTM D-1710.
Gasket:
Viton A per MIL-R-83248
Bead:
(High Performance Application).

ELECTRICAL(S):

Impedance: 50 Ohms nominal.
Frequency Range: DC to 40.0 GHz.
VSWR: 1.5:1 Max to 40 GHz.
Insertion Loss: .08 √f(GHz).
Working Voltage: 500 Vrms max @ sea level.
Dielectric Withstanding Voltage: 1500 Vrms min.
R.F. HiPot Voltage: 1000 Vrms min @ 5MHz.
Corona Level: 375 Vrms @ 70,000 ft.
Insulation Resistance: 5000 MegOhms min.
R.F. Leakage: -90 dB min from 2 to 3 GHz
Contact Resistance:
Initial:
Center Contact: 5.0 Milliohm max.
Outer Contact: 2.0 Milliohm max.
After Environment:
Center Contact: 7.0 Milliohm max.
Outer Contact: NA.

MECHANICAL(S):

Mating Characteristics:
Interface per Mil-Std-348.
Force To Engage & Disengage:
Torque: 2 inch-pounds max.
Longitudinal Force: NA.
Connector Durability:
500 cycles min @ 12 cycles/minute max.
Permeability: Less than 2.0 mu.
Center Contact Retention:
Axial Force: 6 pounds min.
Torque: 4 inch-ounces min.
Coupling Proof Torque: 15 inch-pounds min.
Coupling Mech. Retention: 60 pounds min.

ENVIRONMENTAL(S):

Temperature Range: -55°C to +125°C.
Thermal Shock:
Mil-Std-202, Method 107, Test Cond. B.
Temperature Cycle:
Mil-Std-202, Method 102, Test Cond. C.
Moisture Resistance:
Mil-Std-202, Method 106, Insulation resistance at least 200 MegOhms within 5 minutes after removal from humidity.
Corrosion:
Mil-Std-202, Method 101, Test Cond. B.
Vibration:
Mil-Std-202, Method 204, Test Cond. D.
Shock:
Mil-Std-202, Method 213, Test Cond. I.

FINISH(ES):

Body And Coupling Nut:
(for CCSF's) Passivate per ASTM A-967.
(for CC's) Gold plate per ASTM B-488,
over nickel under plate per AMS-QQ-N-290.
Center Conductor:
Gold plate per ASTM B-488, over nickel under plate per AMS-QQ-N-290.

APPLICABLE CARLISLE IT DOCUMENTS

WDRK STD	PROD INST	ASSY INST
NA	NA	NA

NOTICE

THE DRAWING DISPLAYED A CONFIDENTIAL PROPRIETARY DESIGN GENERATED BY CARLISLE INTERCONNECT TECHNOLOGIES AND ALL DESIGN, MANUFACTURING, REPRODUCTION, USE AND SALE RIGHTS REGARDING THE SAME ARE EXPRESSLY RESERVED. IT IS LOANED FOR A LIMITED PERIOD AND FOR A SPECIFIC PURPOSE AND THE RECIPIENT AGREES BY ACCEPTING THIS DRAWING NOT TO REPLY OR DISCLOSE ANY INFORMATION REGARDING IT TO ANY UNAUTHORIZED PERSON TO INCORPORATE WITHIN PRODUCTS ANY DESIGN, NATURE RESULTING TO THE DESIGN. ALL PATENT RIGHTS HEREIN ARE EXPRESSLY RESERVED BY CARLISLE INTERCONNECT TECHNOLOGIES, GERMANY, SA 92705

TOLERANCES AND NOTES
EXCEPT AS NOTED
DIMENSIONS ARE IN INCHES.
LINEAR .XX ±.015
LINEAR .XXX ±.005 ANGULAR ± 1/2°
FRACTION ± 1/32
1. MACHINE FINISH 63 RMS
2. BREAK ALL SHARP EDGES .003 MAX.
3. MACHINED FILLETS .005 MAX.
4. MACHINED SURFACES SHALL BE TO REPRESENTIVE AND WITHIN .005 INCHES PER INCH.
5. MACHINED DIAMETERS CONCENTRIC WITHIN .005 T.I.R.
6. DIMENSIONS TO BE MET BEFORE PLATING.
7. CHAMFER ALL THREADS 45°.
8. THREADS PER H-28.
9. REMOVE MARKED EDGES ON TEFLON.
10. REMOVE ALL BURRS.

–			–	–
MATERIAL			SPECIFICATION	PROCUREMENT
APPROVAL INITIALS		DATE	CARLISLE Interconnect Technologies Corona, CA 92705	
DRAWN BY	R.C.	03.12.02		
CHECKED BY			TITLE SMK (2.92mm) MALE TO MALE RADIUS RIGHT ANGLE ADAPTER	
TEST ENGR				
QUALITY				
DESIGN ENGR	DNg	08.11.06	SCALE 5:1	DIRECTORY\BLUE-DIRECTORY SHEET 1 OF 1
MFG ENGR				
SDS APPRV	HN	11/08/11	SIZE C	CODE 30990 DRAWING NO. 220 REV B

ENG-DWG REV. E

onlinecomponents.com
THE ONLINE DISTRIBUTOR OF ELECTRONIC COMPONENTS