THIS DRAWING IS UNPUBLISHED. RELEASED FOR PUBLICATION -.- .
© COPYRIGHT - BY TYCO ELECTRONICS CORPORATION. ALL RIGHTS RESERVED.

LOC	DIST
GP	00

REVISIONS

P	LTR	DESCRIPTION	DATE	DWN	APVD
	A	REVISED PER ECN 0S13-0094-05	11JUL06	JDP	CWR

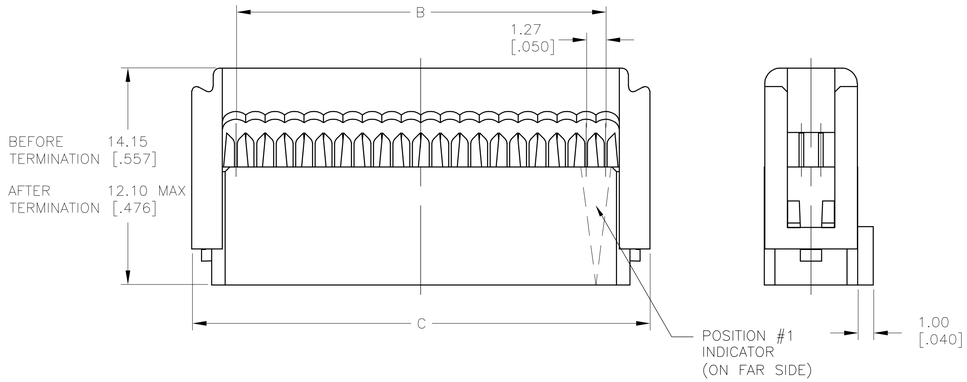

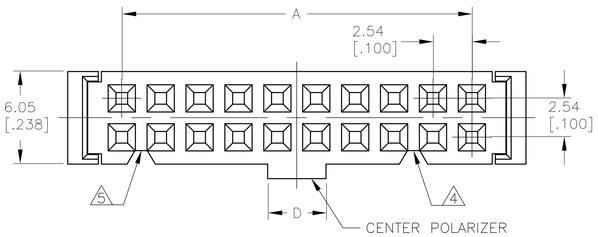

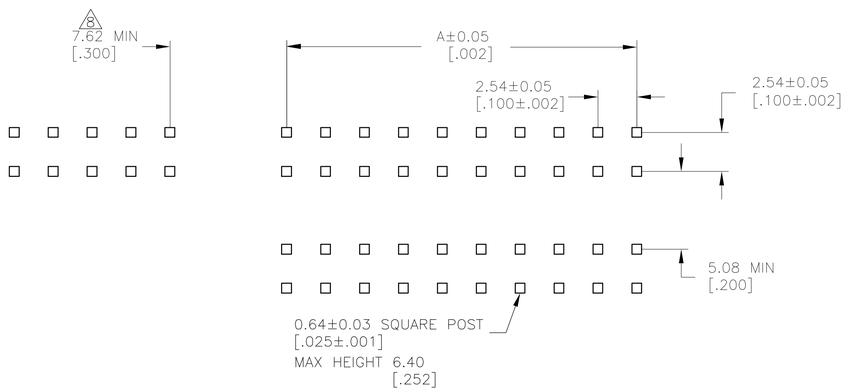

POST LAYOUT

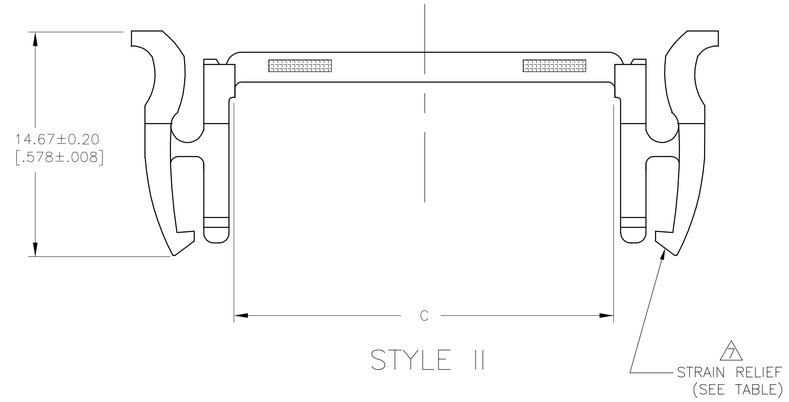

STYLE II

1. 20 POSITION CONNECTOR ASSEMBLY SHOWN.
2. MOLDED PARTS: THERMOPLASTIC, UL94V-0 RATED, COLOR BLACK. CONTACTS: PHOSPHOR BRONZE.
3. CONTACTS: 0.00038[.000015] MIN GOLD ON MATING AREA, 0.00254-0.00508[.000100-.000200] BRIGHT TIN LEAD ON TERMINATION END, ALL OVER 0.00127[.000050] MIN NICKEL ON ENTIRE CONTACT.
4. POLARIZER FEATURE DOES NOT EXIST ON POSITION #1 END FOR 14 POSITION ASSEMBLIES AND SMALLER.
5. POLARIZER FEATURE DOES NOT EXIST ON THIS END FOR 6 POSITION ASSEMBLIES.
6. FOR TERMINATION OF 26 OR 28 AWG STRANDED OR SOLID PVC INSULATED FLAT RIBBON CABLE. SEE TYCO DRAWINGS 57034 (26 AWG) OR 57040 (28 AWG) FOR DETAILS.
7. STRAIN RELIEF PACKAGED SEPARATELY AND SHIPPED WITH ASSEMBLY.
8. SPACING BETWEEN CONNECTORS TO BE .615 MIN WHEN USING STYLE II STRAIN RELIEFS. CONSIDER A LARGER MIN TO ACCOMMODATE FINGER ACCESS.

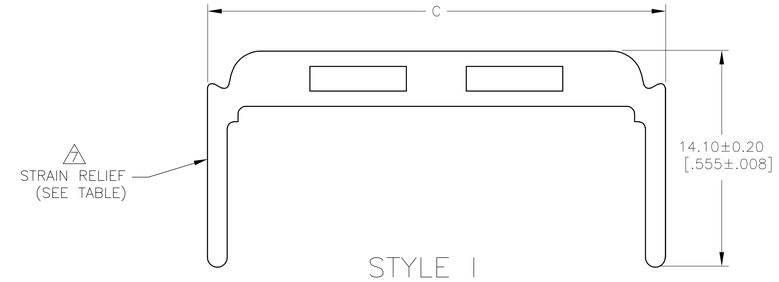

STYLE I

STRAIN RELIEF STYLE	D	C	B	A	NUMBER OF POSITIONS	T&B PART NUMBER (REFERENCE)	TYCO PART NUMBER
I	3.80[.150]	85.78[3.377]	80.01[3.150]	78.74[3.100]	64	636-6441	1437029-3
NONE	3.80[.150]	85.78[3.377]	80.01[3.150]	78.74[3.100]	64	636-6430	1437029-1
I	3.80[.150]	80.70[3.177]	74.93[2.950]	73.66[2.900]	60	636-6041	9-1437028-6
NONE	3.80[.150]	80.70[3.177]	74.93[2.950]	73.66[2.900]	60	636-6030	9-1437028-3
I	3.80[.150]	68.00[2.677]	62.23[2.450]	60.95[2.400]	50	636-5041	7-1437028-2
NONE	3.80[.150]	68.00[2.677]	62.23[2.450]	60.95[2.400]	50	636-5030	5-1437028-7
I	3.80[.150]	55.30[2.177]	49.53[[1.950]	48.26[1.900]	40	636-4041	3-1437028-7
NONE	3.80[.150]	55.30[2.177]	49.53[[1.950]	48.26[1.900]	40	636-4030	1437028-9
I	3.80[.150]	47.68[1.877]	41.91[1.650]	40.64[1.600]	34	636-3441	8-1437027-4
NONE	3.80[.150]	47.68[1.877]	41.91[1.650]	40.64[1.600]	34	636-3430	6-1437027-3
I	3.80[.150]	37.52[1.477]	31.75[1.250]	30.48[1.200]	26	636-2641	3-1437027-7
NONE	3.80[.150]	37.52[1.477]	31.75[1.250]	30.48[1.200]	26	636-2630	2-1437027-7
NONE	3.80[.150]	34.98[1.377]	29.21[1.150]	27.94[1.100]	24	636-2430	1-1437027-7
I	3.80[.150]	29.90[1.177]	24.13[.950]	22.86[.900]	20	636-2041	1437027-9
NONE	3.80[.150]	29.90[1.177]	24.13[.950]	22.86[.900]	20	636-2030	1437027-2
II	3.80[.150]	22.22[.875]	19.05[.750]	17.78[.700]	16	636-1641LS	9-1437026-1
I	3.80[.150]	24.82[.977]	19.05[.750]	17.78[.700]	16	636-1641	8-1437026-8
NONE	3.80[.150]	24.82[.977]	19.05[.750]	17.78[.700]	16	636-1630	7-1437026-8
II	3.80[.150]	19.68[.775]	16.51[.650]	15.24[.600]	14	636-1441LS	7-1437026-1
I	3.80[.150]	22.28[.877]	16.51[.650]	15.24[.600]	14	636-1441	6-1437026-8
NONE	3.80[.150]	22.28[.877]	16.51[.650]	15.24[.600]	14	636-1430	5-1437026-8
II	3.20[.126]	14.62[.575]	11.43[.450]	10.16[.400]	10	636-1041LS	4-1437026-6
I	3.20[.126]	17.20[.677]	11.43[.450]	10.16[.400]	10	636-1041	4-1437026-2
NONE	3.20[.126]	17.20[.677]	11.43[.450]	10.16[.400]	10	636-1030	3-1437026-4
II	1.90[.075]	9.52[.375]	6.35[.250]	5.08[.200]	6	636-0641LS	2-1437026-1
I	1.90[.075]	12.12[.477]	6.35[.250]	5.08[.200]	6	636-0641	2-1437026-0
NONE	1.90[.075]	12.12[.477]	6.35[.250]	5.08[.200]	6	636-0630	1-1437026-8

ELECTRICAL PROPERTIES	
CURRENT RATING	1 AMP
INSULATION RESISTANCE	>1 x 10^9 OHMS @ 500 VDC
DWV	>500 VRMS AT SEA LEVEL
ENVIRONMENTAL PROPERTIES	
TEMPERATURE RATING	-55°C TO 125°C

COPYRIGHT 2004
TYCO ELECTRONICS CORP
ALL RIGHTS RESERVED

THIS DRAWING IS A CONTROLLED DOCUMENT.

DIMENSIONS: mm [INCHES]

TOLERANCES UNLESS OTHERWISE SPECIFIED:
0 PLC ± -
1 PLC ± -
2 PLC ± -
3 PLC ± 0.13[.005]
4 PLC ± -
ANGLES ± -

MATERIAL 2
FINISH 3

DWN J.GERACE 19AUG04
CHK C.ROHDE 19AUG04
APVD M.WALMSLEY 19AUG04

PRODUCT SPEC —
APPLICATION SPEC —
WEIGHT —
CUSTOMER DRAWING

Tyco Electronics Corporation
Harrisburg, PA 17105-3608

CONNECTOR ASSEMBLY,
FEMALE SOCKET TRANSITION,
636 SERIES

SIZE	CAGE CODE	DRAWING NO	REV
A1	00779	C-3-1437022-0	

RESTRICTED TO

SCALE 10:1 SHEET 1 OF 1 REV A

OBSOLETE
NOT the LATEST
REVISION