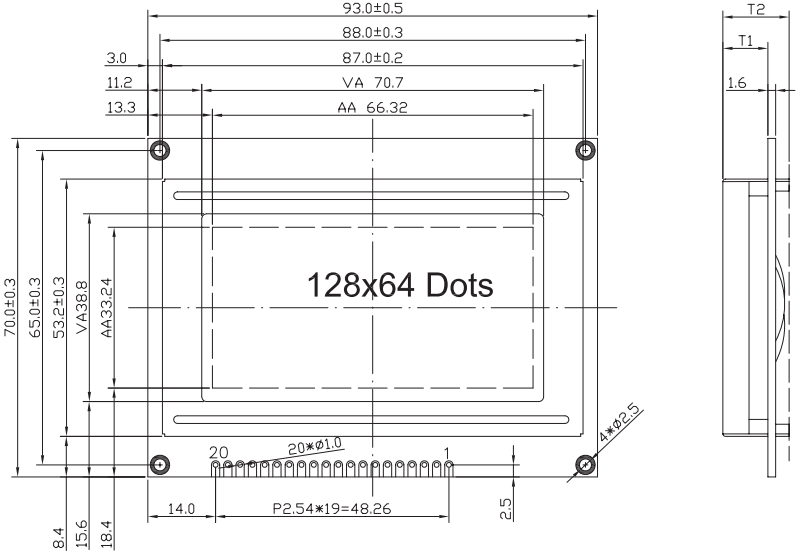

PIN	SYMBOL
20	A
19	K
18	VEE
17	/RES
16	CS2
15	CS1
14	DB7
13	DB6
12	DB5
11	DB4
10	DB3
9	DB2
8	DB1
7	DB0
6	E
5	R/W
4	RS
3	V0
2	VDD
1	VSS

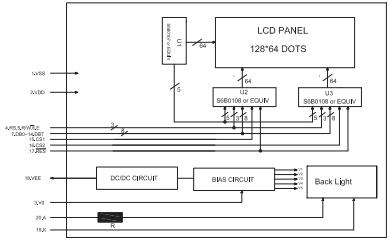

BLOCK DIAGRAM

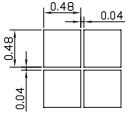

ITEM	T1	T2
WITH BL	9.3	14.2
WITHOUT BL	4.6	9.5