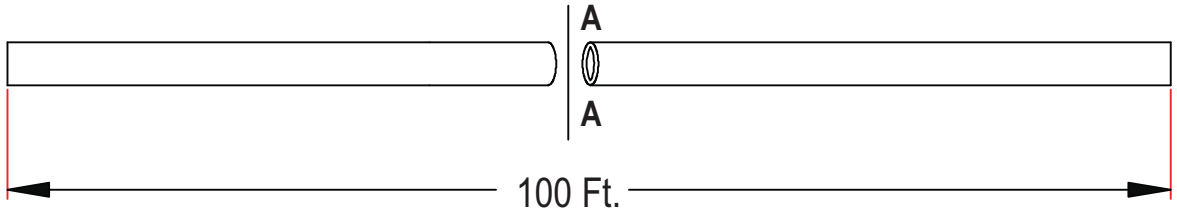

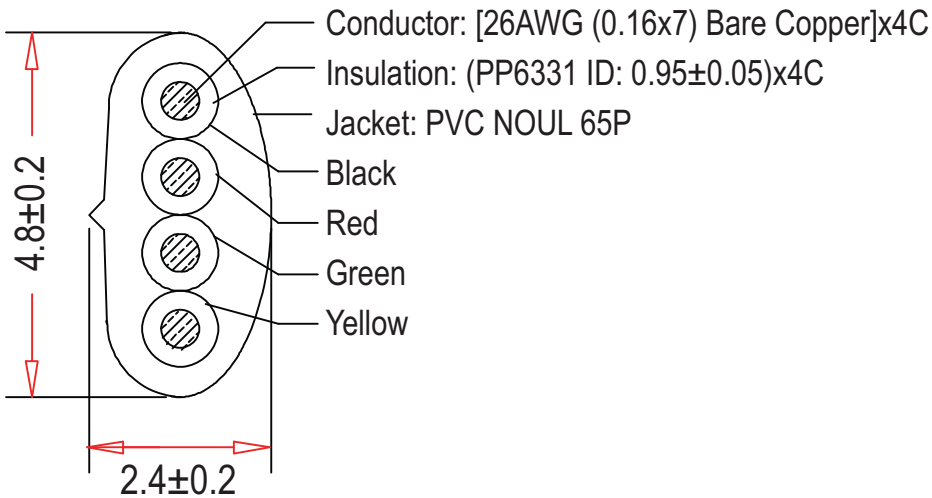

Sec: A - A

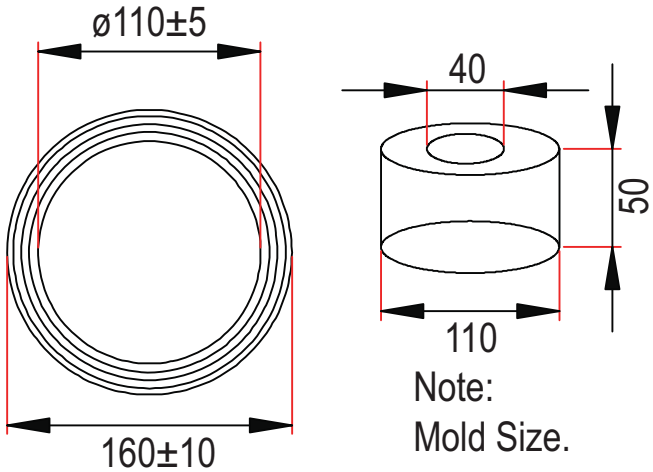

Note:
Mold Size.

100Ft/R. PE Film

Unit: MM

RoHS Complaint

Scale	1:1							Name
TOLERANCE						Drawn	12.19.11	Chappell
X.X	±0.40					Approved		
X.XX	±0.25							
X.XXX	±0.15							
Angle	±3°							
			Modification	Date	Name			

ASSMANN WSW components

Item No. AT-K-26-4-B/100-R

Title Modular Straight cable - Raw, 4 Contact, 26AWG, Black, 100Ft.

Drawing No.

rev00

Replace

Sheet