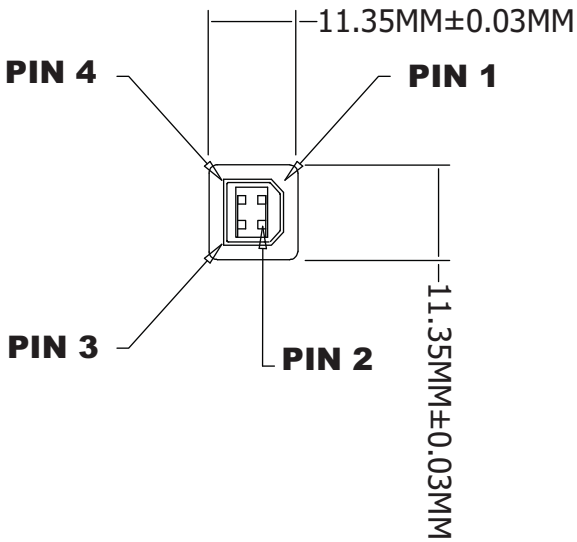

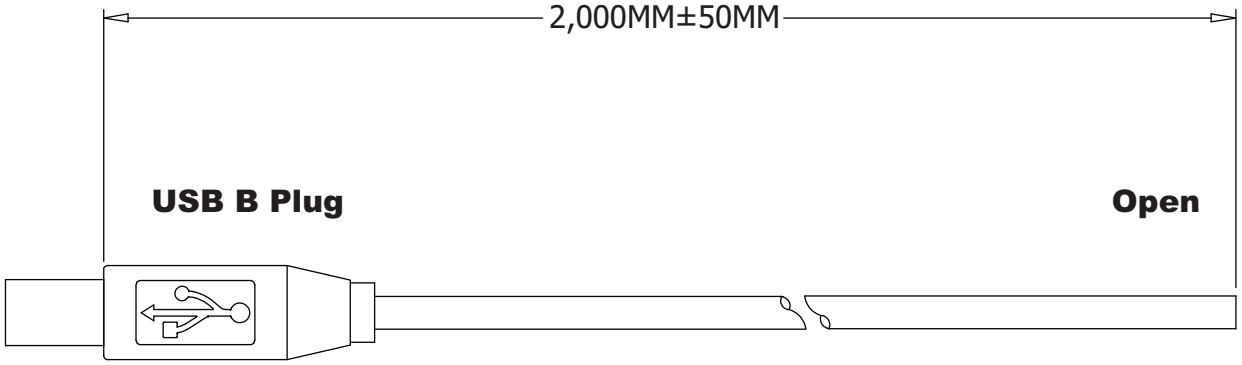

PIN ASSIGNMENT

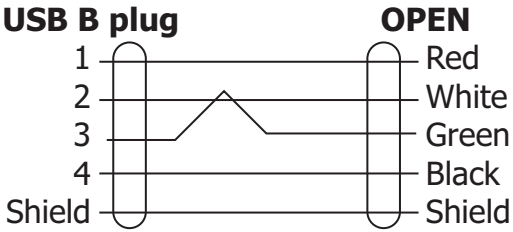

Material:

- Cable: UL2725,#28x1P(Insulation:PE)+#28X2c(Insulation:SR-PCV) +AL/MY+Braid, Tinned Copper, O.D:4.7
- Connector:USB B Plug
- Color: Beige
- Molded Type

RoHS Complaint

Scale	1:1						Name
TOLERANCE							
X.X	±0.40			Drawn	08.29.11		Chappell
X.XX	±0.25			Approved			
X.XXX	±0.15						
Angle	±3°						
			Modification	Date	Name		

ASSMANN WSW components

Item No. **AK673-OE-R**

Title USB Cable, B Plug <=> Open End, 2 Meters

Drawing No. **rev00**

Replace | Sheet