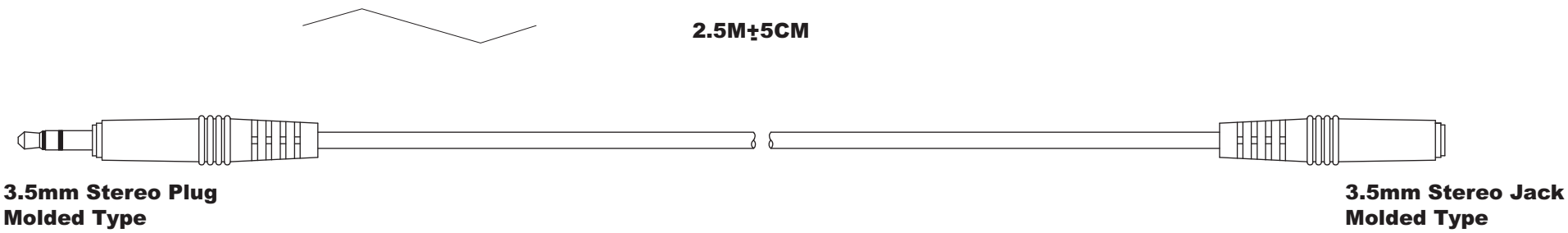

Material:

- Cable: [7/0.12)X2C+(43/0.12)]X1C

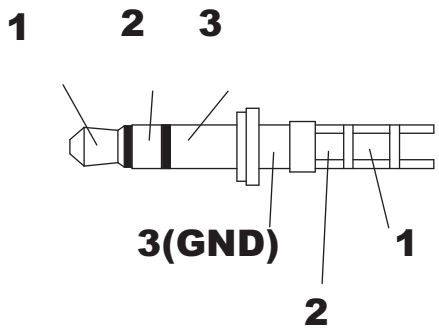

Scale:None

5.3.5mm Stereo Jack(Detail):

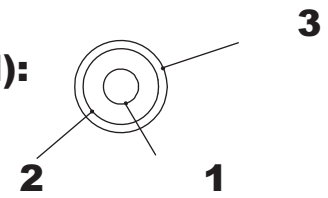

Configuration

3.5MM Stereo Plug		3.5MM Stereo Jack
1	———	1
2	———	2
3	——— (Shield) ———	3

Material:

- Cable: [7/0.12)X2C+(43/0.12)]X1C
  - OD 3.0MM
  - Jacket Black PVC
- Both connectors with normal type
- Overall molded with Black PVC
- 3.5MM Stereo Plug

Unit: MM

RoHS Complaint

Scale	1:1							Name
TOLERANCE						Drawn	01.03.12	Chappell
X.X	±0.40					Approved		
X.XX	±0.25							
X.XXX	±0.15							
Angle	±3°							
			Modification	Date	Name			

ASSMANN WSW components

Item No.

AK203-2.5-R

Title

Stereo Connection Cable, 2.5 Meters, Black
3.5MM Male <=> 3.5MM Stereo Female

Drawing No.

rev00

Replace

Sheet