THIS DRAWING IS UNPUBLISHED. RELEASED FOR PUBLICATION
© COPYRIGHT 2018 BY - TE CONNECTIVITY ALL RIGHTS RESERVED.

REVISIONS					
P	LTR	DESCRIPTION	DATE	DWN	APVD
	B28	REVISED PER ECO-18-010529	10JUL2018	JMS	HC
	B29	REVISED PER ECO-18-015009	24SEP2018	JMS	HC
	B30	REVISED PER ECO-19-003442	11MAR2019	JMS	HC
	B31	REVISED PER ECO-19-006701	08MAY2019	JMS	GK

LIST OF PARTS

QTY REQUIRED			ITEM	DESCRIPTION	COLOR	MATERIAL SPECIFICATION	RECYCLING CODE	WEIGHT (GRAM)
INDEX C	INDEX B	INDEX A						
-	-	1	1	HOUSING, KEYING OPTION "A"	BLACK	30% GF PBT	>PBT-GF30<	TBD
-	1	-		HOUSING, KEYING OPTION "B"	GRAY	30% GF PBT	>PBT-GF30<	TBD
1	-	-		HOUSING, KEYING OPTION "C"	NATURAL	30% GF PBT	>PBT-GF30<	TBD
1	1	1	2	TPA	RED	15% GF PBT	>PBT-GF15<	TBD
1	1	1	3	LEVER	GRAY	33% GF NYLON	>PA66-GF33<	TBD
1	1	1	4	END SEAL COVER	BLACK	15% GF PBT	>PBT-GF15<	TBD
1	1	1	5	END SEAL GROMMET	LT BLUE	SILICON	>VMQ<	TBD
1	1	1	6	RING SEAL	BLUE	SILICON	>VMQ<	TBD

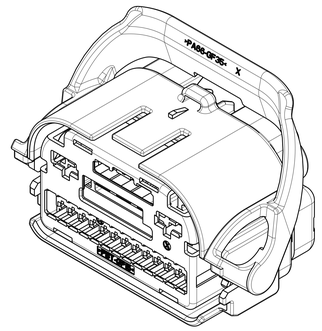

1. PART MUST CONFORM TO THE USCAR-2 SPECIFICATION, DATED 07/DEC/00 (REVISION 3).
2. 0.2mm MAXIMUM RADIUS PERMISSIBLE ON EDGES AND FILLETS SHOWN AS SHARP FOR PLASTIC PARTS.
3. PRODUCTION DATE CODE AND PINOUT ID CODE MUST BE LEGIBLE AND PERMANENTLY APPLIED WHEREVER PACKAGE SIZE PERMITS OR OTHER AGREEMENTS ARE MADE.
4. MATES WITH ASSEMBLY SHOWN ON DRAWING 1438842.
5. SEE TE INSTRUCTION SHEET 408-8911 FOR PROPER POSITIONING OF TPA AND TE INSTRUCTION SHEET 408-8832 FOR APPLICATION USE OF CONNECTOR SYSTEM.
6. TERMINAL CAVITIES 9-34 ARE RESTRICTED TO WIRE OD RANGE OF 1.20 - 2.34mm.

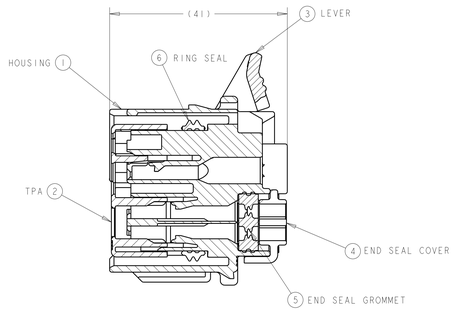

SECTION AA-AA

TPA AND LEVER SHOWN IN PRE-SEATED POSITION 5

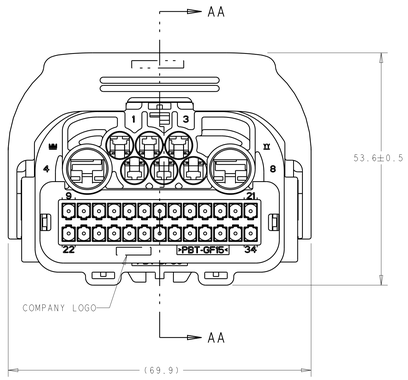

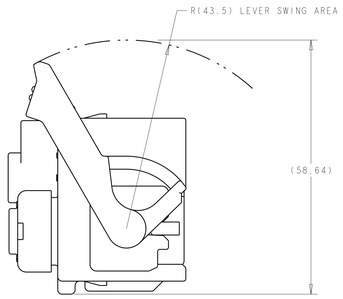

APPLICABLE COMPONENTS (FOR REFERENCE ONLY)				APPLICABLE WIRE SIZES (FOR REFERENCE ONLY)1	COMPONENT MATING PART NUMBER
DESCRIPTION	COLOR/ PLATING	SUPPLIER	SUPPLIER PART NUMBER		
6 TERMINAL - FEMALE 1.5mm	TIN	MOLEX	33012-2001	16 AWG OR METRIC EQUIVALENT	33000-0002
6 TERMINAL - FEMALE 1.5mm	TIN	MOLEX	33012-2002	18-20 AWG OR METRIC EQUIVALENT	33000-0002
6 TERMINAL - FEMALE 1.5mm	TIN	MOLEX	33012-2003	22 AWG OR METRIC EQUIVALENT	33000-0003
TERMINAL - FEMALE 2.8mm	TIN	TE	1326032-2	20 AWG OR METRIC EQUIVALENT	1326031-2
TERMINAL - FEMALE 2.8mm	TIN	TE	1326032-3	18 AWG OR METRIC EQUIVALENT	1326031-3
TERMINAL - FEMALE 2.8mm	TIN	TE	1326032-4	16 AWG OR METRIC EQUIVALENT	1326031-4
TERMINAL - FEMALE 2.8mm	TIN	TE	1326032-5	14 AWG OR METRIC EQUIVALENT	1326031-5
TERMINAL - FEMALE 2.8mm	TIN	TE	1326032-6	12 AWG OR METRIC EQUIVALENT	1-1326031-1
CABLE SEAL - 2.8mm	GREEN	YAZAKI	7158-3111-60	1.2-1.9mm WIRE O.D.	N/A
CABLE SEAL - 2.8mm	YELLOW	YAZAKI	7158-3112-70	1.8-2.3mm WIRE O.D.	N/A
CABLE SEAL - 2.8mm	WHITE	YAZAKI	7158-3113-40	2.1-3.0mm WIRE O.D.	N/A
CABLE SEAL - 2.8mm	LT GRAY	YAZAKI	7158-3110-40	3.1-3.3mm WIRE O.D.	N/A
TERMINAL - FEMALE 6.3mm	TIN	YAZAKI	7116-4140-02	20-16 AWG OR METRIC EQUIVALENT	7114-4140-02
TERMINAL - FEMALE 6.3mm	TIN	YAZAKI	7116-4141-02	14 AWG OR METRIC EQUIVALENT	7114-4141-02
TERMINAL - FEMALE 6.3mm	TIN	YAZAKI	7116-4142-02	12 AWG OR METRIC EQUIVALENT	7114-4142-02
TERMINAL - FEMALE 6.3mm	TIN	YAZAKI	7116-4143-02	10 AWG OR METRIC EQUIVALENT	7114-4143-02
CABLE SEAL - 6.3mm	RED	YAZAKI	7158-3081-50	1.4-2.3mm WIRE O.D.	N/A
CABLE SEAL - 6.3mm	BLUE	YAZAKI	7158-3082-90	2.1-3.0mm WIRE O.D.	N/A
CABLE SEAL - 6.3mm	BLACK	YAZAKI	7158-3083	3.0-3.8mm WIRE O.D.	N/A
CABLE SEAL - 6.3mm	LT GRAY	YAZAKI	7158-3084-40	3.8-4.05mm WIRE O.D.	N/A
ANTI-ROTATION CLIP	NATURAL	TRW	PC47597-1	N/A	N/A
SINGLE TREE CLIP	NATURAL	TRW	PC47688-1	N/A	N/A
CAVITY PLUG - 2.8mm	BLUE	YAZAKI	7158-3114-90	N/A	N/A
CAVITY PLUG - 6.3mm	GREEN	YAZAKI	7158-3080-60	N/A	N/A

NOTE: SEE SUPPLIER DRAWINGS FOR LATEST INFORMATION AND CRIMP SPECIFICATIONS.

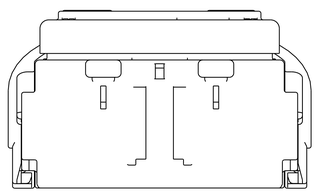

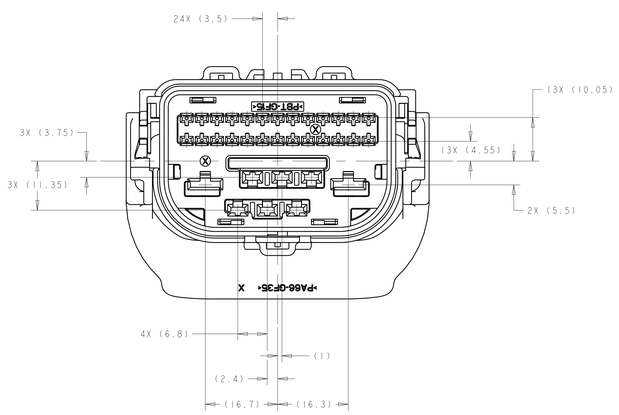

THIS DRAWING IS A CONTROLLED DOCUMENT.

DIMENSIONS: mm

TOLERANCES UNLESS OTHERWISE SPECIFIED:
0 PLC ±0.3
1 PLC ±0.3
2 PLC ±0.1
3 PLC ±0.1
4 PLC ±0.1
ANGLES ±1°

MATERIAL -
FINISH -

DWN DL DRUMMOND 19OCT2004
CHK RL COBLE 19OCT2004
APVD RL COBLE 19OCT2004
PRODUCT SPEC -
APPLICATION SPEC -
WEIGHT -
CUSTOMER DRAWING

TE Connectivity

NAME PLUG ASSEMBLY, 34 WAY, SEALED, INLINE HYBRID, FEMALE

SIZE A0 | CAGE CODE 00779 | DRAWING NO C-1438841 | RESTRICTED TO

SCALE 2:1 | SHEET 1 OF 4 | REV B31

A806 (3/13)

THIS DRAWING IS UNPUBLISHED. RELEASED FOR PUBLICATION
© COPYRIGHT 2018 BY - TE CONNECTIVITY ALL RIGHTS RESERVED.

REVISIONS

F	LTR	DESCRIPTION	DATE	DWN	APVD
	-	SEE SHEET 1	-	-	-

TE P/N	PINOUT ID CODE	INDEX (KEY)	COLOR	1	2	3	4	5	6	7	8	9	10	11	12	13	14	15	16	17	18	19	20	21	22	23	24	25	26	27	28	29	30	31	32	33	34
7-1438841-7	ACW	A	BLACK												12							19	20	21	22				26	27					32		
7-1438841-6	ACV	A	BLACK											11											22	23			26	27	28	29		31	32	33	34
7-1438841-5	ACU	A	BLACK									9	10	11		13	14	15	16	17	18	19	20		22	23	24	25	26	27	28			31	32	33	34
7-1438841-4	ACT	A	BLACK										10		12	13	14	15	16	17	18	19	20	21			24	25	26	27	28		30	31	32	33	34
7-1438841-3	ACS	A	BLACK												12		14	15	16		18		20						26	27							
7-1438841-2	ACR	A	BLACK										10		12	13	14	15	16	17	18	19	20	21			24	25	26	27	28	29	30	31	32	33	34
7-1438841-1	ACQ	A	BLACK												12		14	15	16		18		20						26	27		29					
7-1438841-0	ACP	A	BLACK									9	10	11		13	14	15	16	17	18	19	20			23	24	25	26	27				31	32	33	34
6-1438841-9	ACO	A	BLACK											11												23			26	27		29		31	32	33	34
6-1438841-8	ACN	A	BLACK									9	10	11		13	14	15	16	17							24	25						31	32	33	34
6-1438841-7	ACM	A	BLACK											11																			30	31	32	33	34
6-1438841-6	ACL	A	BLACK												12	13	14		16	17	18	19	20	21			24	25		27	28		30	31		33	
6-1438841-5	ACK	A	BLACK												12		14		16		18		20							27							
6-1438841-4	ACJ	A	BLACK																										26	27					32		
6-1438841-3	ACI	A	BLACK																									25	26	27					32		
6-1438841-2	ACH	A	BLACK												12							19	20	21	22			25	26	27					32		
6-1438841-1	ACG	A	BLACK												12									21				25	26	27					32		
6-1438841-0	ACF	A	BLACK												12	13	14		16	17	18	19	20	21			24	25		27	28	29	30	31		33	
5-1438841-9	ACE	A	BLACK												12		14		16		18		20							27		29					
5-1438841-8	ACD	A	BLACK																								24		26	27	28				32		
5-1438841-7	ACC	A	BLACK												12									21			24	25	26	27	28				32		
5-1438841-6	ACB	A	BLACK																								24	25	26	27	28				32		
5-1438841-5	ACA	A	BLACK											11													24	25			28						
5-1438841-4	ABZ	A	BLACK											11													24				28						
5-1438841-3	ABY	A	BLACK											11													24				28				32		
5-1438841-2	ABX	A	BLACK											11													24	25			28				32		
5-1438841-1	ABW	A	BLACK											11	12							19	20	21	22		24	25			28						
5-1438841-0	ABV	A	BLACK											11	12							19	20	21	22		24				28						
4-1438841-9	ABU	A	BLACK											11	12							19	20	21	22		24				28				32		
4-1438841-8	ABT	A	BLACK											11	12							19	20	21	22		24	25			28				32		
4-1438841-7	ABS	A	BLACK																			19	20	21	22				26	27			30	31			34
4-1438841-6	ABR	A	BLACK															15	16	17						23							30	31			
4-1438841-5	ABQ	A	BLACK												12							19	20	21	22		24	25	26	27	28						
4-1438841-4	ABP	A	BLACK																			19			22		24	25	26	27	28				32		
4-1438841-3	ABO	A	BLACK																			19			22		24		26	27	28				32		
4-1438841-2	ABN	A	BLACK												12							19		21	22		24	25	26	27	28				32		
4-1438841-1	ABM	A	BLACK												12							19	20	21	22		24	25	26	27	28				32		
4-1438841-0	ABL	A	BLACK											11								19					24								32		
3-1438841-9	ABK	A	BLACK											11								19					24	25							32		
3-1438841-8	ABJ	A	BLACK											11								19					24	25									
3-1438841-7	ABI	A	BLACK											11	12							19	20	21			24	25							32		
3-1438841-6	ABH	A	BLACK											11	12							19	20	21			24	25									
3-1438841-5	ABG	A	BLACK											11																							
3-1438841-4	ABF	A	BLACK											11								19					24										
3-1438841-3	ABE	A	BLACK											11	12								20	21											32		34
3-1438841-2	ABD	A	BLACK												12							19	20	21	22		24		26	27	28						
3-1438841-1	ABC	A	BLACK												12								20	21	22				26	27	28				32		
3-1438841-0	ABB	A	BLACK												12							19	20	21	22		24		26	27	28				32		
2-1438841-9	ABA	A	BLACK									9	10	11	12	13	14									23			26	27							
2-1438841-8	AAZ	A	BLACK									9	10	11	12	13	14						20	21		23			26	27							
2-1438841-7	AAY	A	BLACK									9	10	11	12	13	14						20	21		23			26	27				31	32		
2-1438841-6	AAX	A	BLACK									9	10	11	12								20	21						27							
2-1438841-5	AAW	A	BLACK									9	10	11	12															27							
2-1438841-4	AAV	A	BLACK									9	10	11	12	13	14									23			26	27				31	32		
2-1438841-3	AAU	A	BLACK									9	10	11	12	13	14	15					20	21	22	23		25	26	27	28	29	30				
2-1438841-2	AAT	A	BLACK									9	10	11	12	13	14	15					20	21	22	23		25	26	27	28	29	30	31	32		
2-1438841-1	AAS	A	BLACK											11	12							19	20	21			24								32		34
2-1438841-0	AAR	A	BLACK											11	12							19	20	21			24										
1-1438841-9	AAQ	A	BLACK											11	12								20	21													
1-1438841-8	AAP	A	BLACK											11	12								20	21											32		
1-1438841-7	AAO	A	BLACK											11	12							19	20	21			24								32		
1-1438841-6	AAN	A	BLACK																				20	21	22	23	24	25		27				31		33	
1-1438841-5	AAM	A	BLACK																				20			23	24	25		27				31	32	33	
1-1438841-4	AAL	A	BLACK																				20	21	22	23	24	25		27				31	32	33	
1-1438841-3	AAK	A	BLACK													13	14											25	26	27	28	29			32	33	
1-1438841-2	AAJ	A	BLACK																				20	21	22	23	24	25	26	27	28	29		31			34
1-1438841-1	AAI	A	BLACK															15					20	21	22	23	24	25	26	27	28	29		31			34
1-1438841-0	AAH	A	BLACK													13	14						20	21				25	26	27	28	29			32	33	
1438841-9	AAG	A	BLACK											11	12	13	14						20	21				25	26	27	28	29			32	33	
1438841-8	AAF	A	BLACK																				20	21				25	26	27	28	29					
1438841-7	AAE	A	BLACK																									25	26	27	28	29					
1438841-6	AAD	A	BLACK											11	12	13	14											25	26	27	28	29			32	33	
1438841-5	AAC	A	BLACK													13	14	15					20	21	22	23	24	25	26	27	28	29		31	32	33	34
1438841-4	AAB	A	BLACK											11	12	13	14	15					20	21	22	23	24	25	26	27	28	29		31	32	33	34
1438841-3	CAA	C	NATURAL																																		
1438841-2	BAA	B	GRAY																																		
1438841-1	AAA	A	BLACK																																		

CIRCUITS 1 THRU 8 REMAIN OPEN

BLOCKED CAVITIES INDICATED BY A NUMERIC SYMBOL IN THAT CIRCUIT LOCATION

FEMALE HOUSING ASSEMBLY
SCALE 2:1

INDEX A

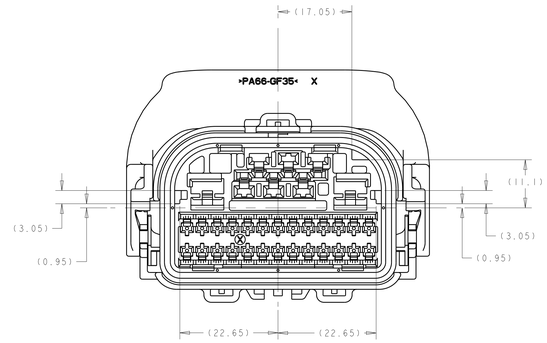

(TPA NOT SHOWN)

INDEX B

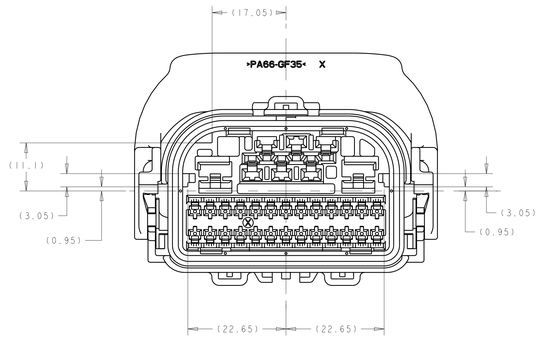

(TPA NOT SHOWN)

INDEX C

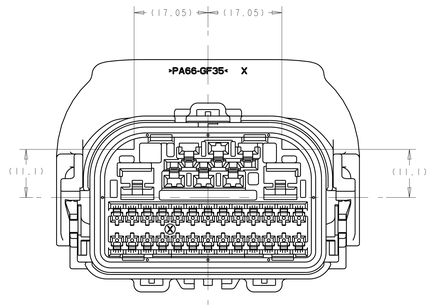

(TPA NOT SHOWN)

THIS DRAWING IS A CONTROLLED DOCUMENT.

DIMENSIONS: mm

TOLERANCES UNLESS OTHERWISE SPECIFIED:
0 PLC ±0.3
1 PLC ±0.3
2 PLC ±0.1
3 PLC ±0.1
4 PLC ±0.1
ANGLES ±1°

MATERIAL -
FINISH -

DWN N. DRUMMOND 30CT2004
CHK N. COBLE 190CT2004
APVD N. COBLE 190CT2004

PRODUCT SPEC -
APPLICATION SPEC -
WEIGHT -

CUSTOMER DRAWING

TE Connectivity

PLUG ASSEMBLY, 34 WAY, SEALED, INLINE HYBRID, FEMALE

SIZE A0 | CAGE CODE 00779 | DRAWING NO C-1438841 | RESTRICTED TO -

SCALE 2:1 | SHEET 2 OF 4 | REV B31

A806 (3/13)

THIS DRAWING IS UNPUBLISHED. RELEASED FOR PUBLICATION
© COPYRIGHT 2018 BY - TE CONNECTIVITY ALL RIGHTS RESERVED.

REVISIONS

F	LTR	DESCRIPTION	DATE	DWN	APVD
-	-	SEE SHEET 1	-	-	-

TE P/N	PINOUT ID CODE	INDEX (KEY)	COLOR	1	2	3	4	5	6	7	8	9	10	11	12	13	14	15	16	17	18	19	20	21	22	23	24	25	26	27	28	29	30	31	32	33	34
5-2203654-5	AFV	B	GRAY									9		11		13	14							21	22	23	24	25	26	27	28	29	30	31	32	33	34
5-2203654-4	AFU	B	GRAY														14							21		23	24	25	26	27	28	29	30	31	32	33	34
5-2203654-3	AFT	A	BLACK												12	13	14							21			24	25	26	27	28	29		31			
5-2203654-2	AFS	B	GRAY									9	10	11			14		16	17			20	21			24	25					30	31		33	
5-2203654-1	AFR	B	GRAY									9	10	11									20				24						30	31		33	
5-2203654-0	AFQ	B	GRAY									9	10	11			14		16	17	18		20	21			24	25	26	27	28	29	30	31		33	
4-2203654-9	AFP	A	BLACK											11				15				19		21	22										32	33	
4-2203654-8	AFO	A	BLACK												12												24	25		27				31			
4-2203654-7	AFN	A	BLACK											11	12	13	14	15				19		21			24	25	26	27	28	29		31			
4-2203654-6	AFM	A	BLACK											11	12	13	14	15				19		21	22		24	25	26	27	28	29		31	32	33	
4-2203654-5	AFL	A	BLACK									9			12	13					18	19	20						26						32	33	
4-2203654-4	AFK	A	BLACK												12						18	19			22				26							33	
4-2203654-3	AFJ	A	BLACK												12	13					18	19							26					31			
4-2203654-2	AFI	A	BLACK									9			12	13					18	19							26							33	
4-2203654-1	AFH	A	BLACK												12	13	14			17				21	22		24	25	26	27	28	29		31			
4-2203654-0	AFG	A	BLACK									9			12	13		15			18	19	20						26						32	33	
3-2203654-9	AFF	A	BLACK												12	13		15			18	19	20						26						32	33	
3-2203654-8	AFE	A	BLACK									9			12	13		15		17	18	19	20	21				25	26		28			31	32	33	
3-2203654-7	AFD	A	BLACK									9			12	13		15		17	18	19	20	21			24	25	26		28			31	32	33	
3-2203654-6	AFC	A	BLACK											11				15				19		21	22										32	33	34
3-2203654-5	AFB	A	BLACK																					21													
3-2203654-4	AFA	A	BLACK											11				15				19		21													
3-2203654-3	AEZ	A	BLACK												12					17							24	25		27				31			
3-2203654-2	AEY	A	BLACK												12	13	14							21		23			26	27	28	29					
3-2203654-1	AEX	A	BLACK												12	13	14							21	22	23			26	27	28	29					
3-2203654-0	AEW	A	BLACK												12	13	14			17				21			24	25	26	27	28	29		31			
2-2203654-9	AEV	A	BLACK											11	12	13	14	15				19		21		23			26	27	28	29					
2-2203654-8	AEU	B	GRAY									9	10	11			14		16	17	18			21			24	25	26	27	28	29	30	31		33	
2-2203654-7	AET	B	GRAY									9	10	11													24						30	31		33	
2-2203654-6	AES	B	GRAY									9		11		13	14				18				22		24	25	26	27	28	29	30	31	32	33	34
2-2203654-5	AER	B	GRAY									9		11		13	14				18				22				26	27	28	29	30	31	32	33	34
2-2203654-4	AEQ	A	BLACK									9			12	13		15		17	18	19	20	21	22		24	25	26		28			31	32	33	
2-2203654-3	AEP	A	BLACK									9			12	13		15		17	18	19	20	21	22			25	26		28			31	32	33	
2-2203654-2	AEO	A	BLACK												12			15			18	19			22				26							33	
2-2203654-1	AEN	A	BLACK												12	13		15			18	19							26					31			
2-2203654-0	AEM	A	BLACK												12	13		15			18	19			22				26							33	
1-2203654-9	AEL	A	BLACK									9			12			15			18	19			22				26							33	
1-2203654-8	AEK	A	BLACK									9			12	13		15			18	19							26							33	
1-2203654-7	AEJ	A	BLACK									9			12			15	16	17	18	19	20	21	22		24	25	26	27	28						
1-2203654-6	AEI	B	GRAY													13															28		30		32		34
1-2203654-5	AEH	A	BLACK									9		11	12	13	14	15		17		19		21			24	25	26	27	28	29		31			
1-2203654-4	AEG	A	BLACK									9			12										22				26							33	
1-2203654-3	AEF	B	GRAY													13																	30		32		34
1-2203654-2	AEE	B	GRAY													13									22						28	29	30		32	33	34
1-2203654-1	AED	B	GRAY													13									22								30		32	33	34
1-2203654-0	AEC	B	GRAY													13															28	29	30		32		34
2203654-9	AEB	A	BLACK											11	12	13	14	15		17		19		21			24	25	26	27	28	29		31			
2203654-8	AEA	A	BLACK										10	11	12																		30				
2203654-7	ADZ	A	BLACK										10	11	12			15				19											30				
2203654-6	ADY	A	BLACK										10	11	12			15				19			22								30		32	33	
2203654-5	ADX	A	BLACK											11	12					17							24	25		27				31			
2203654-4	ADW	A	BLACK										10	11	12	13	14							21		23			26	27	28	29	30				
2203654-3	ADV	A	BLACK										10	11	12	13	14	15				19		21		23			26	27	28	29	30				
2203654-2	ADU	A	BLACK											11	12	13	14			17				21			24	25	26	27	28	29		31			
2203654-1	ADT	A	BLACK											11	12	13	14	15		17		19		21	22		24	25	26	27	28	29		31	32	33	
9-1438841-9	ADS	A	BLACK									9			12			15							22				26							33	
9-1438841-8	ADR	A	BLACK									9			12	13		15		17			20	21	22		24	25	26							33	
9-1438841-7	ADQ	A	BLACK									9			12	13		15		17			20	21	22			25	26							33	
9-1438841-6	ADP	A	BLACK									9			12	13		15							22				26							33	
9-1438841-5	ADO	A	BLACK									9			12	13									22				26							33	
9-1438841-4	ADN	A	BLACK									9			12	13													26							33	
9-1438841-3	ADM	A	BLACK									9			12	13		15											26							33	
9-1438841-2	ADL	A	BLACK									9	10	11	12	13	14	15		17		19		21			24	25	26	27	28	29		31			
9-1438841-1	ADK	A	BLACK													13															28		30		32		34
9-1438841-0	ADJ	B	GRAY													13																29	30		32		34
8-1438841-9	ADI	B	GRAY													13									22							29	30		32	33	34
8-1438841-8	ADH	B	GRAY													13	14	15	16	17									26					31			
8-1438841-7	ADG	A	BLACK											11														25		27	28						34
8-1438841-6	ADF	A	BLACK													13	14	15	16	17									26					31			
8-1438841-5	ADE	C	NATURAL																							23							30				
8-1438841-4	ADD	C	NATURAL																				20			23				27			30				
8-1438841-3	ADC	A	BLACK									9		11																		29				33	
8-1438841-2	ADB	A	BLACK									9	10	11	12								20	21	22	23		25		27	28	29	30	31			
8-1438841-1	ADA	A	BLACK									9	10	11	12								20	21	22	23	24	25	26	27	28	29	30	31		33	34
8-1438841-0	ACZ	A	BLACK									9	10	11	12																						
7-1438841-9	ACY	A	BLACK									9	10	11	12									21	22	23		25			28	29	30	31			
7-1438841-8	ACX	A	BLACK																							23						29				33	34

BLOCKED CAVITIES INDICATED BY A NUMERIC SYMBOL IN THAT CIRCUIT LOCATION

CIRCUITS 1 THRU 8 REMAIN OPEN

THIS DRAWING IS A CONTROLLED DOCUMENT.

DIMENSIONS: mm

TOLERANCES UNLESS OTHERWISE SPECIFIED:
0 PLC ±0.3
1 PLC ±0.3
2 PLC ±0.1
3 PLC ±0.1
4 PLC ±0.1
ANGLE ±1°

MATERIAL -
FINISH -

DWN 30CT2004 DRUMMOND
CHK 19OCT2004 COBLE
APVD 19OCT2004 COBLE
PRODUCT SPEC -
APPLICATION SPEC -
WEIGHT -
CUSTOMER DRAWING

TE Connectivity

NAME PLUG ASSEMBLY, 34 WAY, SEALED, INLINE HYBRID, FEMALE

SIZE A0 | CAGE CODE 00779 | DRAWING NO C-1438841 | RESTRICTED TO

SCALE 2:1 | SHEET 3 OF 4 | REV B31

4806 (3/13)

THIS DRAWING IS UNPUBLISHED. RELEASED FOR PUBLICATION
© COPYRIGHT 2018 BY - TE CONNECTIVITY ALL RIGHTS RESERVED.

REVISIONS

P	LTR	DESCRIPTION	DATE	DWN	APVD
	-	SEE SHEET 1	-	-	-

CIRCUITS 1 THRU 8 REMAIN OPEN

TE P/N	PINOUT ID CODE	INDEX (KEY)	COLOR	1	2	3	4	5	6	7	8	9	10	11	12	13	14	15	16	17	18	19	20	21	22	23	24	25	26	27	28	29	30	31	32	33	34
8-2203654-2	AGW	A	BLACK												12	13	14							21			24	25		27				31			
8-2203654-1	AGV	B	GRAY														14						20	21		23	24	25	26	27	28	29	30	31	32	33	34
8-2203654-0	AGU	A	BLACK										10	11	12	13	14	15	16	17	18					23		25	26	27						33	34
7-2203654-9	AGT	A	BLACK											11	12	13											24	25	26								
7-2203654-8	AGS	B	GRAY									9					14	15	16	17	18	19															
7-2203654-7	AGR	A	BLACK									9							16	17									26	27	28	29	30	31	32	33	
7-2203654-6	AGQ	B	GRAY									9					14	15	16	17	18	19								27	28	29	30	31	32	33	34
7-2203654-5	AGP	B	GRAY																								24	25	26	27	28	29					
7-2203654-4	AGO	A	BLACK																		18									27				31			
7-2203654-3	AGN	A	BLACK																16	17																	
7-2203654-2	AGM	B	GRAY														14	15	16		18													31			
7-2203654-1	AGL	A	BLACK											11	12	13	14										24	25	26								
7-2203654-0	AGK	B	GRAY									9					14													27	28	29	30	31	32	33	34
6-2203654-9	AGJ	B	GRAY									9					14																				
6-2203654-8	AGI	A	BLACK											11	12	13				17	18					23			26							33	34
6-2203654-7	AGH	A	BLACK												12											23										33	34
6-2203654-6	AGG	A	BLACK																16	17	18	19															
6-2203654-5	AGF	A	BLACK											11		13		15	16	17	18		20				24									33	
6-2203654-4	AGE	A	BLACK										10		12	13	14						20	21	22	23	24				28	29	30	31	32	33	
6-2203654-3	AGD	A	BLACK												12	13					18								26							33	34
6-2203654-2	AGC	A	BLACK												12	13		15		17	18		20	21	22			25	26		28			31	32	33	
6-2203654-1	AGB	A	BLACK												12	13					18	19			22				26							33	34
6-2203654-0	AGA	A	BLACK												12	13					18	19							26							33	34
5-2203654-9	AFZ	A	BLACK												12	13					18	19							26							33	
5-2203654-8	AFY	A	BLACK												12	13		15		17	18	19	20	21	22			25	26		28			31	32	33	
5-2203654-7	AFX	A	BLACK											11	12			15				19		21													
5-2203654-6	AFW	A	BLACK												12									21													

BLOCKED CAVITIES INDICATED BY A NUMERIC SYMBOL IN THAT CIRCUIT LOCATION

THIS DRAWING IS A CONTROLLED DOCUMENT.

DIMENSIONS: mm

TOLERANCES UNLESS OTHERWISE SPECIFIED:
0 PLC ±0.5
1 PLC ±0.3
2 PLC ±0.1
3 PLC ±0.1
4 PLC ±0.1
ANGLES ±1°

MATERIAL - -
FINISH - -

DWN DL DRUMMOND 19OCT2004
CHK KL COBLE 19OCT2004
APVD KL COBLE 19OCT2004

PRODUCT SPEC - -
APPLICATION SPEC - -
WEIGHT - -

CUSTOMER DRAWING

TE Connectivity

NAME PLUG ASSEMBLY, 34 WAY, SEALED, INLINE HYBRID, FEMALE

SIZE A0 | CAGE CODE 00779 | DRAWING NO C-1438841 | RESTRICTED TO

SCALE 2:1 | SHEET 4 OF 4 | REV B31

4806 (3/13)