# R95–107

## 14–Pin Blade Socket

### Features

- **PC Board Mount**
- **Hold down clip supplied with socket, also available separately (R95–001)**

### Electrical Rating:

300 Volts, 10 Amps

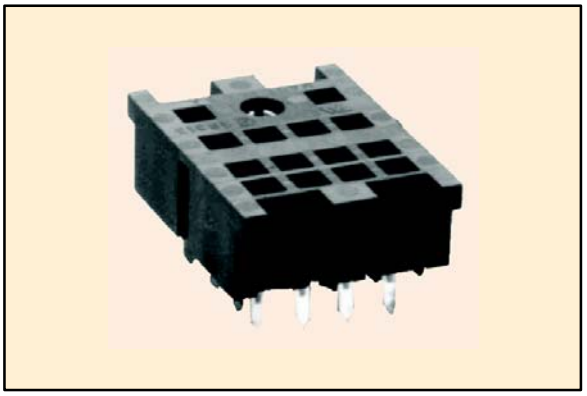

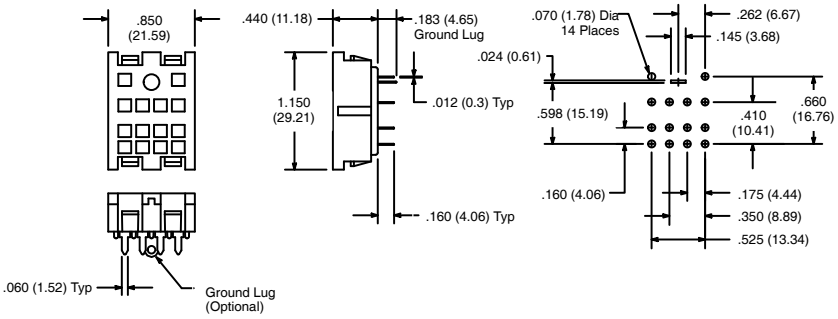


# R95–108

## 16–Pin Blade Socket

### Features

- **PC Board Mount**

### Electrical Rating:
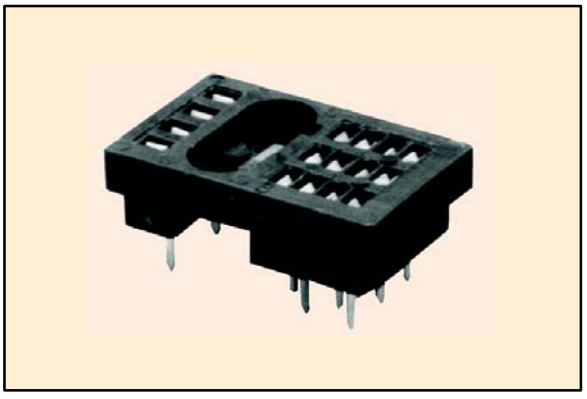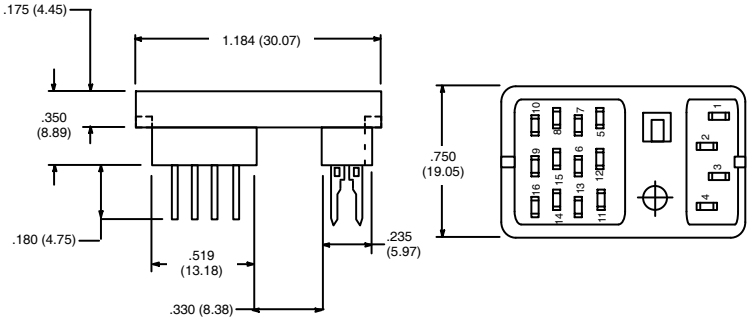
1000 Volts, 10 Amps