Wallplates

Weatherproof Covers

Vertical, for FS/FD Box Mounting

Ordering Information

Description	Catalog Number	UPC
For switches and receptacles with face diameters of 1.68-1.72 in. (42.7-43.7), no	**HBL3394**	783585809106

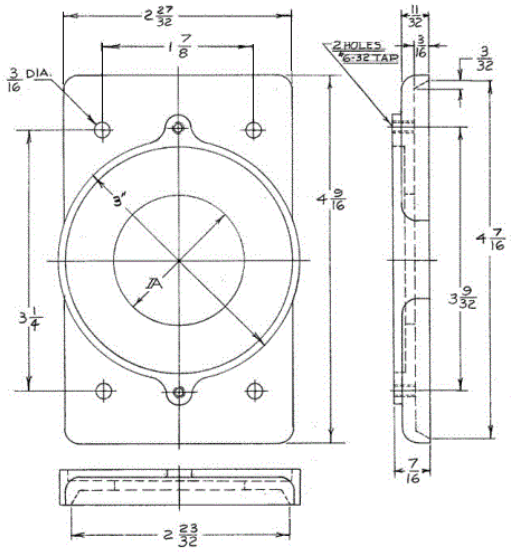

Listings

UL Listed
CSA Certified

Specifications

Material	Aluminum

Online Resources

Customer Use Drawing
eCatalog

Dimensions in Inches (mm)

Hubbell Wiring Device-Kellems • Hubbell Incorporated (Delaware) • 40 Waterview Drive • Shelton, CT 06484
Phone (800) 288-6000 • Fax (800) 255-1031 • Specifications subject to change without notice.

Wiring Device-Kellems