ITT

Interconnect Solutions
Cannon, VEAM, BIW

Enabling miniaturization of critical, soldier technology applications through the fielding of the industry's most innovative mini-circular product lines

Engineered for life

Selector Guide

Mini Circular			
Series	**Nemesis Water Tight**	**Nemesis Super Clean**	**Nemesis High Mating**
Military Spec Market	Commercial	Commercial	Commercial
Coupling System	Snap-on/Breakaway, Bayonet & Push Pull	Snap-on/Breakaway	Snap-on/Breakaway, Bayonet & Push Pull
Maximum Temperature Range	-40° to +100° C	-55° to +125° C	-55° to +125° C
Hardware	Stainless Steel	Stainless Steel	Stainless Steel
Finishes	Black Zinc Nickel & Electroless Nickel	Black Zinc Nickel & Electroless Nickel	Black Zinc Nickel & Electroless Nickel
Contact Type	Crimp & Straight PCB Tails	Crimp & Straight PCB Tails	Crimp & Straight PCB Tails
Contacts	Twist Pin and Sockets	Pogo Pins and Pads	Pogo Pins and Pads
Contact Plating	Gold over Nickel	Gold over Nickel	Gold over Nickel
Wire Size	24 - 32 AWG	24 - 32 AWG	24 - 32 AWG
Contact Rating	3 Amps	2 Amps continuous 3 Amps Peak	2 Amps continuous 3 Amps Peak
Contact Resistance	8 mOhm	15 mOhm	15 mOhm
Voltage Rating	50 Vdc	50 Vdc	50 Vdc
Dielectric Withstanding Voltage Sea Level	500 Volts	500 Volts	500 Volts
Insulation Resistance	5,000 MOhm	5,000 MOhm	5,000 MOhm
Mating Cycles	2,500 (500 Push Pull)	10,000	10,000
Coding	5 Clocking Positions: N, A, B, C and D	5 Clocking Positions: N, A, B, C and D	5 Clocking Positions: N, A, B, C and D
RoHS Compliance	Yes	Yes	Yes
Sealing	IP68>20m	IP67	IP67
Page No.	B-6	B-16	B-22

Mini Circular		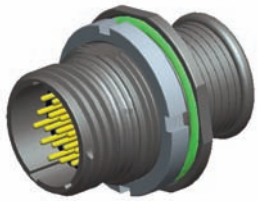	
Series	**Single Start Thread MKJ0**	**Double Start Thread MKJ1**	**Bayonet Style MKJ3**
Military Spec Market	Military/ Industrial/Commercial	Military/ Industrial/Commercial	Military/ Industrial/Commercial
Coupling System	UNC Thread	Double Start	Bayonet
Temperature Range	-55° to +125° C	-55° to +125° C	-55° to +125° C
Hardware	Aluminum	Aluminum/Stainless Steel	Aluminum
Finishes	Cadmium/Zinc Nickel/Nickel	Cadmium/Zinc Nickel/Nickel	Cadmium/Zinc Nickel/Nickel
Contact Termination	Crimp/Solder Cup Straight PCB	Crimp/Solder Cup Straight PCB	Crimp/Solder Cup Straight PCB
PCB Termination	Available	Available	Available
Contact Type	AS39029 Style Machined Pin / Socket	AS39029 Style Machined Pin / Socket	AS39029 Style Machined Pin / Socket
Contact Release	Rear Release	Rear Release	Rear Release
Contact Plating	Gold/Nickel	Gold/Nickel	Gold/Nickel
Contact Sizes	Size 20-16	Size 20-16	Size 20-16
Wire Range AWG	Size #16-28	Size #16-28	Size #16-28
Current Rating	5 Amps (#20) 13 Amps (#16)	5 Amps (#20) 13 Amps (#16)	5 Amps (#20) 13 Amps (#16)
Insulation Resistance Sea Level	500 VAC rms	500 VAC rms	500 VAC rms
Shell Sizes	5 to 18	5 to 18	5 to 18
Mating Cycles	500	500	500
RoHS Compliance	Available	Available	Available
Salt Spray Max	500 Hours	200 Hours	200 Hours
Grommet and Seals	Fluorosilicone	Fluorosilicone	Fluorosilicone
Page No.	B-34	B-40	B-46

Selector Guide

Mini Circular		
Series	**Breakaway MKJ4**	**Metr1x**
Military Spec Market	Military/ Industrial/Commercial	Military/ Industrial/Commercial
Coupling System	Brekaway	Metrical Thread
Temperature Range	-55° to +125° C	-40° to +150° C -40° to +302° F
Hardware	Aluminum	Stainless Steel
Finishes	Cadmium/Zinc Nickel/Nickel	None
Contact Termination	Crimp/Solder Cup Straight PCB	Crimp
PCB Termination	Available	Not Available
Contact Type	AS39029 Style Machined Pin / Socket	Signal
Contact Release	Rear Release	Rear Release
Contact Plating	Gold/Nickel	Gold/Nickel
Contact Sizes	Size 20-16	Size 20
Wire Range AWG	Size #16-28	Size #20-24
Test Current	5 Amps (#20) 13 Amps (#16)	4 Amps
Dielectric Withstanding Voltage Sea Level	500 VAC rms	1400 VAC rms
Shell Sizes	5 to 18	M12
Mating Cycles	500	50
RoHS Compliance	Available	Available
Salt Spray Max	500 Hours	48 Hours
Grommet and Seals	Fluorosilicone	FKM
Sealing		IP69K, IP68 (4m / 2hours)
Page No.	B-52	B-61

Mini Circular		
Series	**MIK**	**MIKM**
Type	Plug and Socket	Plug and Socket
Current Rating	3A Max.	3A Max.
Contact Resistance	8 milliohms max	8 milliohms max
Contact Material	Gold plated copper allloy	Gold plated copper allloy
Shell	Plastic	Plastic
Shell Material	Thermoplastic	Thermoplastic
Available Layouts	7 & 55	7, 55 & 85
Configuration	Circular	Circular
RoHS	Available	Available
Factory Terminated	Yes	Yes
Space Applications	Yes	Yes
Page No.	B-63	B-65

Nemesis Water Tight
NEM-WT

ITT ICS's Water Tight connector is a lightweight, robust and watertight solution designed for military, marine, medical and industrial application. The connector features micro twist pin contact technology and as its name implies the connector is rated for an immersion depth of greater than 20 meters of water.

Specifications

Contact Type	Cable plug and free receptacle crimp, jam nut receptacle PCB
Contacts	Cable plug and free receptacle micro twist pin, receptacle micro socket
Wire Size	24 - 32 AWG
Contact Rating	3 Amps
Voltage Rating	50 Vdc
Insulation Resistance	5,000 Mohm minimum
Dielectric Withstand Voltage	500 Volts
Operating Temperature	-40°C to +100°C
Contact Resistance	8 mOhm maximum
Vibration	20 g's in accordance with MIL-STD-1344 Method 2005, Condition IV
Shock	50 g's in accordance with MIL-STD-1344 Method 2004, Condition E
Durability	2,500 cycles (500 cycles Push Pull)
Shell Plating	RoHS compliant 500 hour salt spray resistant black zinc nickel or electroless nickel
Receptacle Mounting**	Tamper proof jam nut
Receptacle Sealing	Using a conductive 'O' ring, non-conductive 'O' rings are available
EMI Shielding	50db attenuation 100Mhz to 1000Mhz in terminated condition
Coupling	Snap on/Breakaway, bayonet & push pull
Coding	5 polarizing positions; N, A, B, C, and D
Coding Identification*	Individual colors with colored dot on both parts plus indication on the boot; N=blue, A=red, B=green, C=grey and D=yellow
Boot	Cable dependant, either overmoulded or adhered
Sealing	IP68, >20m
Layouts	6 layouts, 7, 14, 19, 37, 40 & 55 contacts
Shell to Shell Resistance	<10 mOhm
Blind Mate	Yes
Cable	ITT standard or customer specified
Cable Earth Termination	360° cable braid termination to the shell
Snap on/Breakaway Forces	30N
Strain Relief	Designed to withstand a 10Kg pull off force minimum
Materials	Shells - Stainless Steel Insulators - Polyester Seals - Fluorosilicone rubber Contacts - Copper alloy with gold over nickel plating

How to Order

NEM	-	WTSB	-	7	14	S	N	T	-	XXX	B

Product **NEM-WT**

	Plug	Receptacle	
Coupling Style:	SB	SB	Snap-on/Breakaway
	BY	BY	Bayonet (contact sales)
	PP	PP	Push Pull
Shell Style:		1	Free Receptacle
	6		Plug
		7	Jam Nut Receptacle**
	8		90° right angle plug (contact sales)
Contact Arrangement:	7	7	
	14	14	
	19	19	
	37	37	Contact Sales for Availability
	40	40	Contact Sales for Availability
	55	55	Contact Sales for Availability
Contact Type:	P		Pin Contact
		S	Socket Contact
Polarising Positions:	N	N	Normal
	A, B, C & D	A, B, C & D	Alternatives
Termination Type:	C	C***	Crimp Contacts
		T	Straight PCB Tails
Termination Code:	XXX	XXX	Contact Sales for Wire and Cable Options
Finish Code:	B	B	Black Zinc Nickel
	N	N	Electroless Nickel

For the full range of plating options, contact sales.

* 7, 14 & 19 way connectors use the same colour coding system but have different polarization. Where duplicate contact layouts are required on the same equipment it is recommended different polarization is used.

** Requires special tool, part number T4909/01.

*** Crimp contacts for free receptacle only.

If less contact pins are required than is available it is possible to supply partially populated connectors on large volume requirements, contact sales for availability.

Contact Arrangements

Face View, Pin Side (Male Twist Pin Contacts)

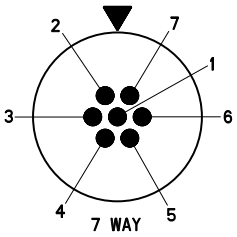

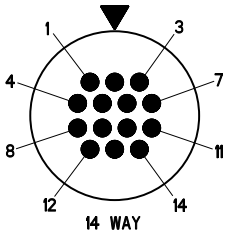

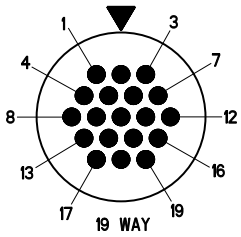

Cavity identification numbers are for reference only; they do not appear on connectors.

Plug Dimensions - Snap On/Breakaway

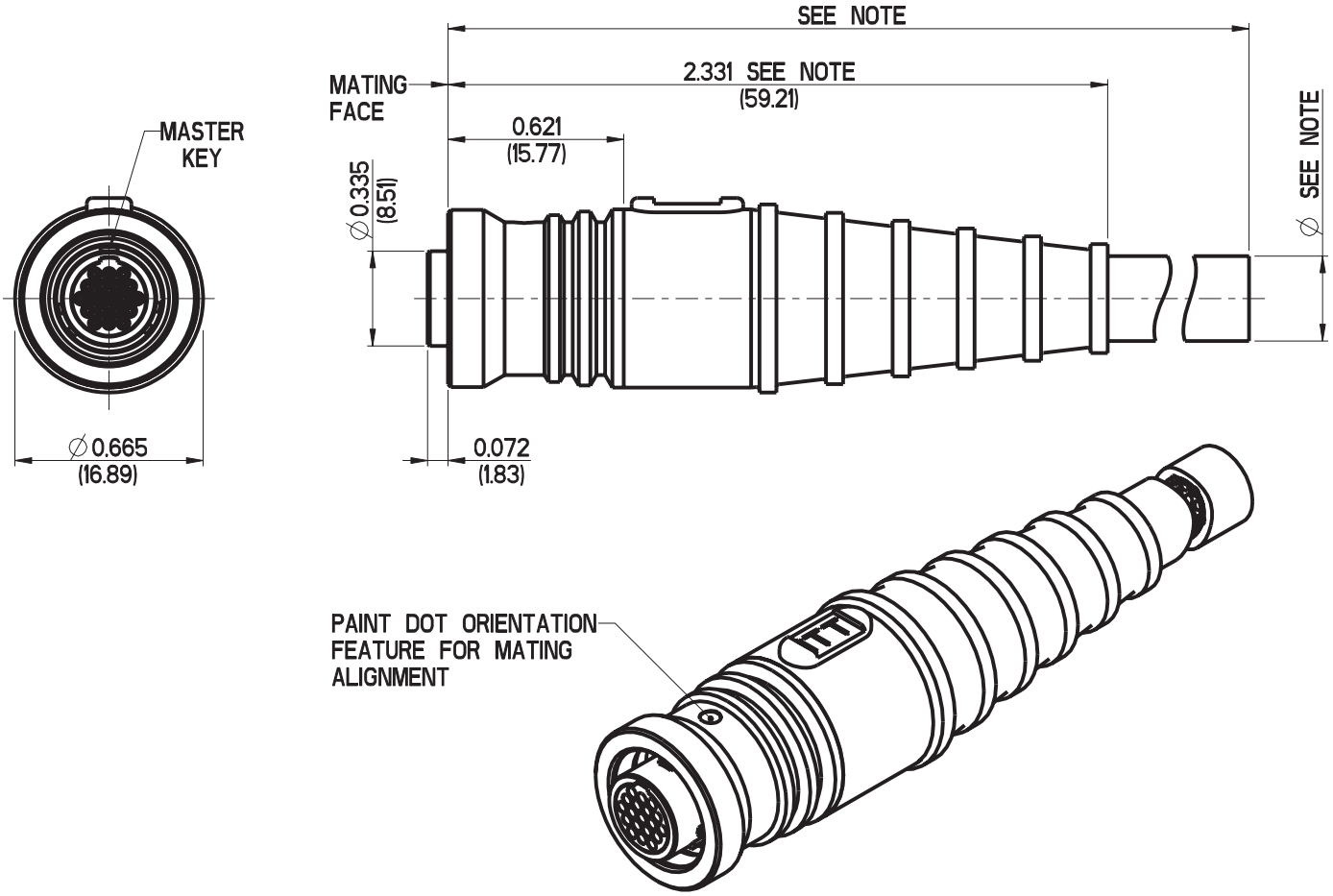

Note: These dimensions to be determined by customer cable requirements.
For 37 & 55 data contact sales.

Plug Dimensions - Push Pull

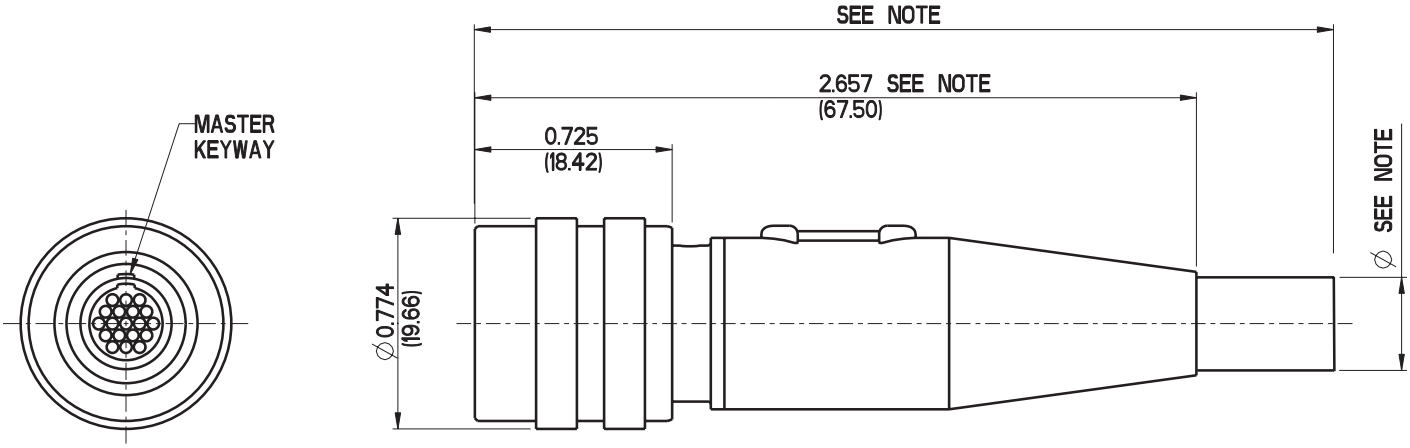

NOTE: These dimensions to be determined by customer cable requirements.

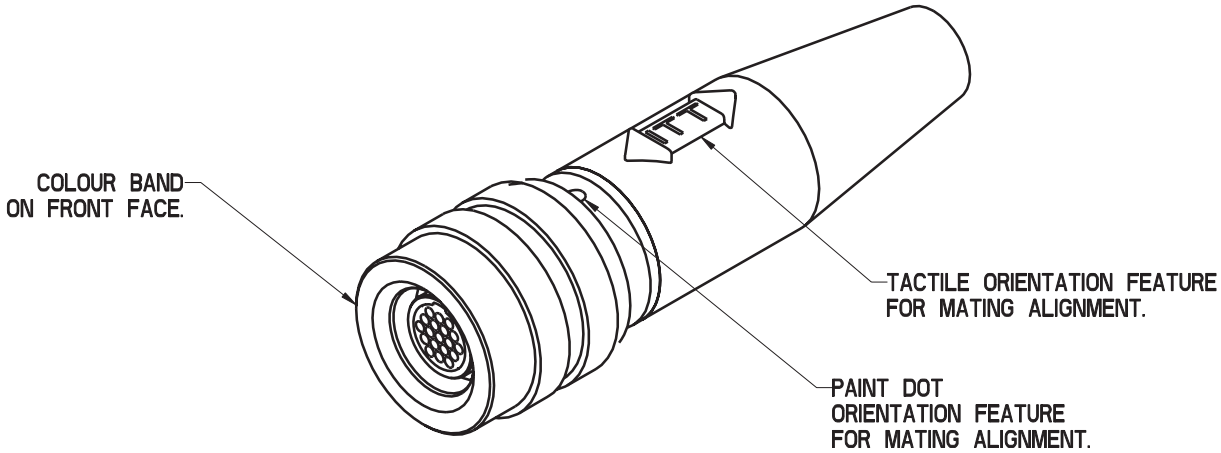

For 37, 40 & 55 data contact sales.

Plug Dimensions - Right Angle

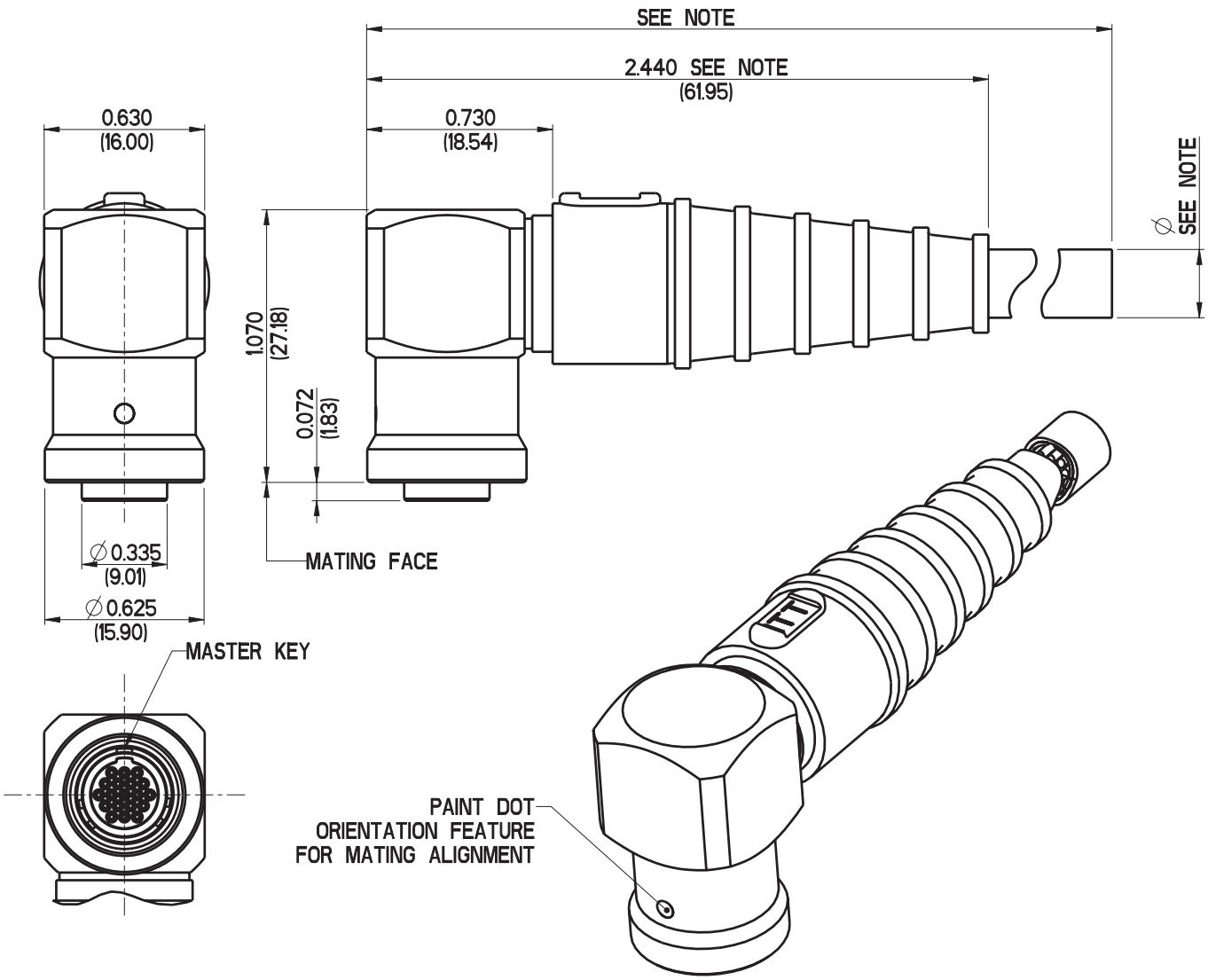

Note: These dimensions to be determined by customer cable requirements.
For 37 and 55 data contact sales.

Dimensions shown in inches (mm)
Specifications and dimensions subject to change

Receptacle Dimensions - Snap On/Breakaway

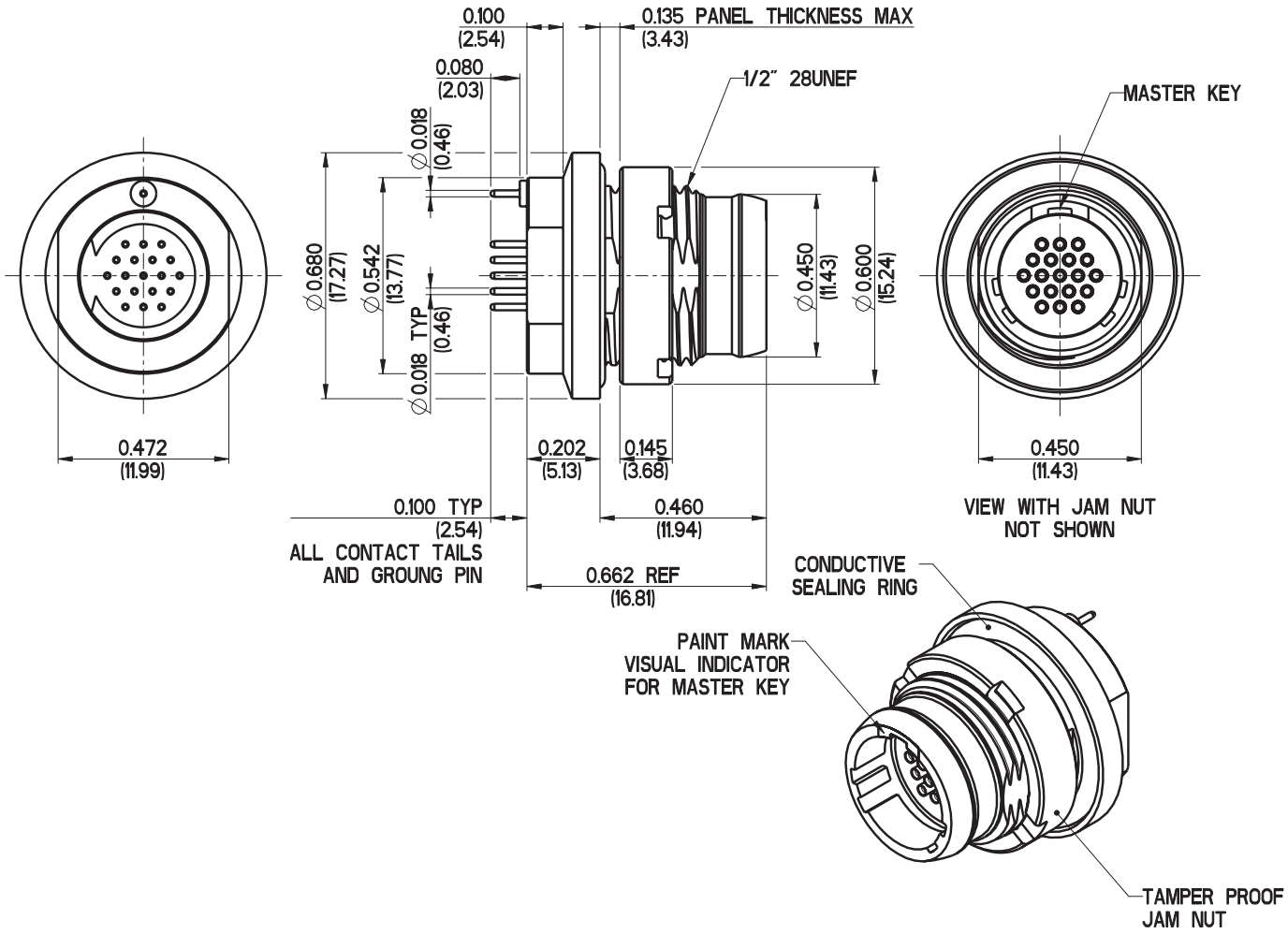

For 37 and 55 data contact sales.

Receptacle Dimensions - Free Receptacle

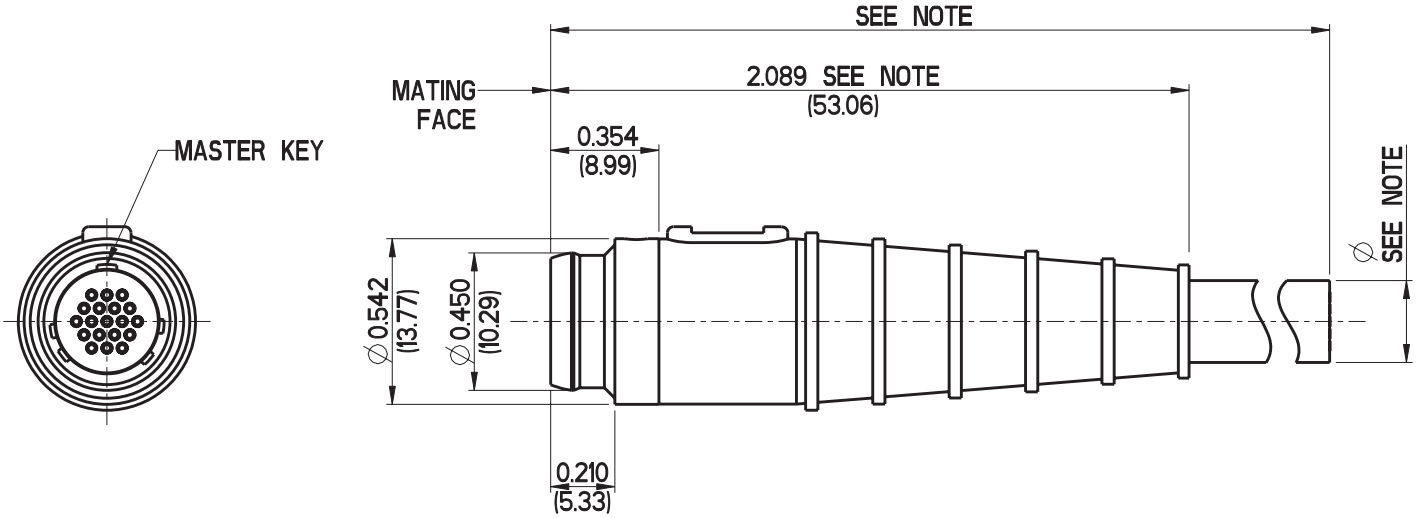

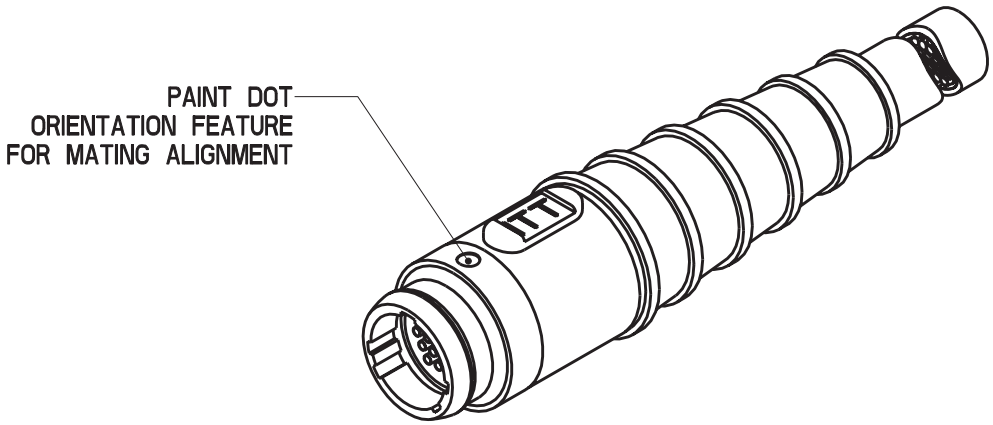

Note: These dimensions to be determined by customer cable requirements.
\For 37 and 55 data contact sales.

Receptacle Dimensions - Push Pull

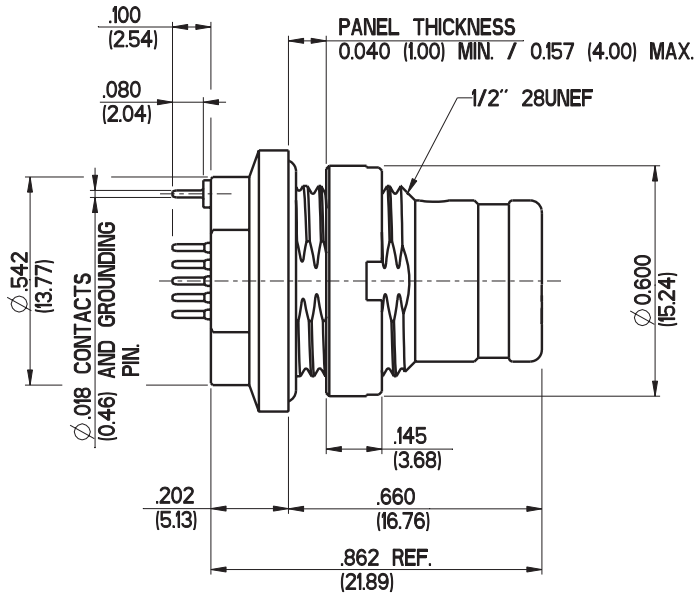

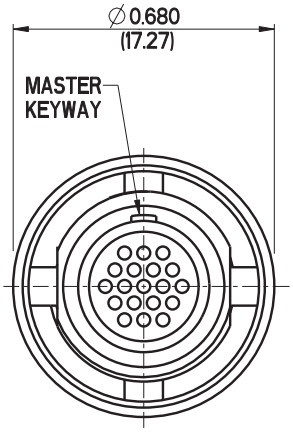

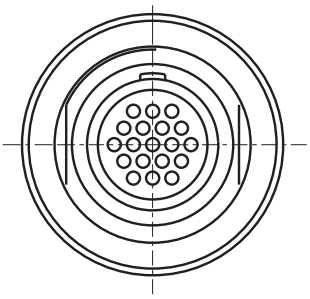

VIEW WITH JAM NUT
NOT SHOWN.

For 37, 40 & 55 data contact sales.

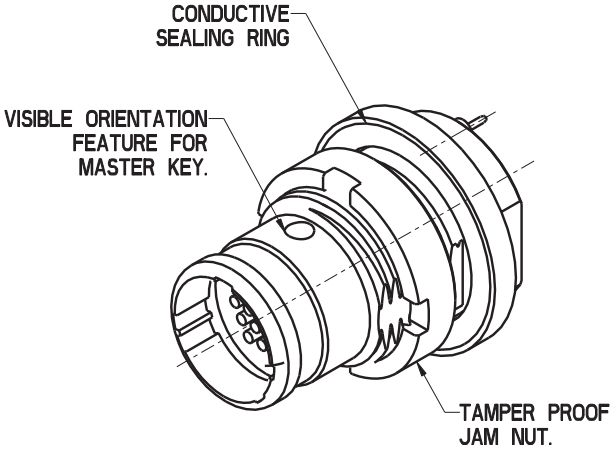

Panel Cut-outs

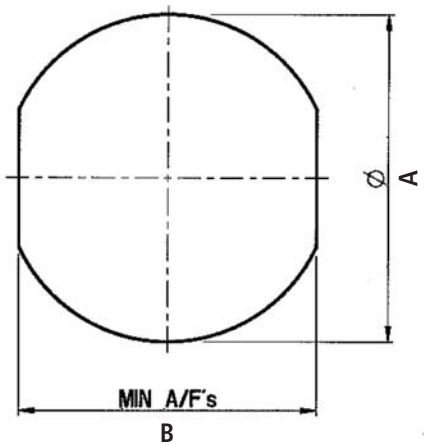

Contact Arrangements	Dimensions	
	A	B
7	0.501 (12.73)	0.455 (11.56)
14	0.501 (12.73)	0.455 (11.56)
19	0.501 (12.73)	0.455 (11.56)

For 37, 40 & 55 data contact sales.

Color Coding

POLARISATION LETTER	COLOR CODING
N	BLUE
A	RED
B	GREEN
C	GREY
D	YELLOW

PCB Layout

GENERAL TOLERANCE	
7 and 19 way	± 0.001 (0.03)
14 way	±0.0015 (0.038)
For ground pins	±0.002 (0.05)

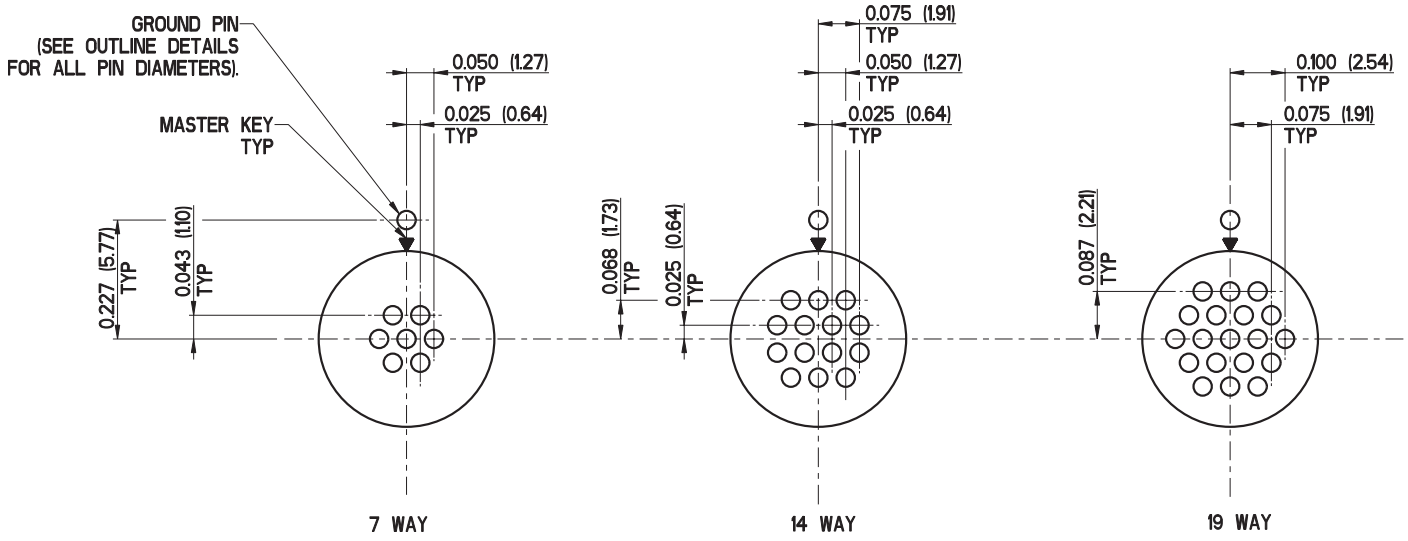

Dimensions shown in inches (mm)
Specifications and dimensions subject to change

Nemesis Super Clean
NEM-SC

Overview

ITT ICS's Super Clean Connector is a lightweight, robust, water-tight and field cleanable** solution designed for military, commercial and industrial applications. The connector features pogo pin technology utilizing ITT's unique spring probe pin/pad contact system for a durable and long life connection. The cleanable feature allows users to maintain their systems in the field even in the dirtiest of environments.

**Patent applied for.

Specifications

Contact Type	Cable receptacle crimp or solder, box plug PCB
Contacts	Plug = pogo pins, receptacle = pogo pads
Wire Size	24 - 32 AWG
Contact Rating	2 Amps continuous, 3 Amps peak
Voltage Rating	50 Vdc
Insulation Resistance	5,000 Mohm minimum
Dielectric Withstand Voltage	500 Volts
Operating Temperature	-55°C to +125°C
Contact Resistance	15 mOhm maximum
Vibration	20 g's in accordance with MIL-STD-1344 Method 2005, Condition IV
Shock	50 g's in accordance with MIL-STD-1344 Method 2004, Condition E
Durability	10,000 cycles
Cleaning Durability	2,500 cycles
Plating	RoHS compliant 500 hour salt spray resistant black zinc nickel or electroless nickel
Receptacle Mounting**	Tamper proof jam nut
Receptacle Sealing	Using a conductive 'O' ring, non-conductive 'O' rings are available
EMI Shielding	50db attenuation 100Mhz to 1000Mhz in terminated condition
Coupling	Snap on/Breakaway
Coding	5 polarizing positions; N, A, B, C, and D
Coding Identification	Individual colors with colored dot on both parts plus indication on the boot; N=blue, A=red, B=green, C=grey and D=yellow
Boot	Cable dependant, either overmoulded or adhered
Sealing	IP67
Layouts	7, 14, 19, 37 & 55
Shell to Shell Resistance	<10 mOhm
Blind Mate	Yes
Cable	ITT standard or customer specified
Cable Earth Termination	360° cable braid termination to the shell
Snap on/Breakaway Forces	30N
Pull Back Barrel Force	To be defined
Strain Relief	Designed to withstand a 10Kg pull off force minimum
Materials	Shells - Stainless Steel Insulators - Polyester Seals - Fluorosilicone rubber Contacts - Copper alloy with gold over nickel plating

How to Order

NEM	-	SCSB	-	7	14	PG	N	T	-	XXX	B

Product **NEM-SC**

	Plug	Receptacle	
Coupling Style:	SB	SB	Snap-on/Breakaway
Shell Style:		1	Free Receptacle (contact sales)
	6		Plug
		7	Jam Nut Receptacle**
Contact Arrangement:	7	7	
	14	14	
	19	19	
	37	37	Contact Sales for Availability
	55	55	Contact Sales for Availability
Contact Type:	PG		Pogo Contact
		PP	Pogo Pad Contact
Polarising Positions:	N	N	Normal
	A, B, C & D	A, B, C & D	Alternatives
Termination Type:	C	C***	Crimp Contacts
		T	Straight PCB Tails
Termination Code:	XXX	XXX	Contact Sales for Wire and Cable Options
Finish Code:	B	B	Black Zinc Nickel
	N	N	Electroless Nickel

For the full range of plating options, contact sales.

** Requires special tool, part numbers T4909/02 for 7 way, T4909/03 for 14 way & T4909/04 for 19 way.

*** Crimp contacts for free receptacle only

Super Clean plugs are inter-mateable with High Mating receptacles.

Contact Arrangements

Face View Pogo Pin Contacts

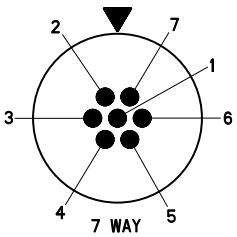

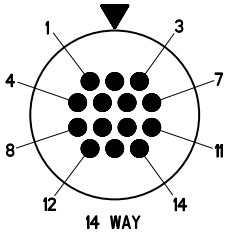

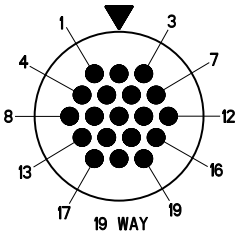

Cavity identification numbers are for reference only; they do not appear on connectors.

Plug Dimensions

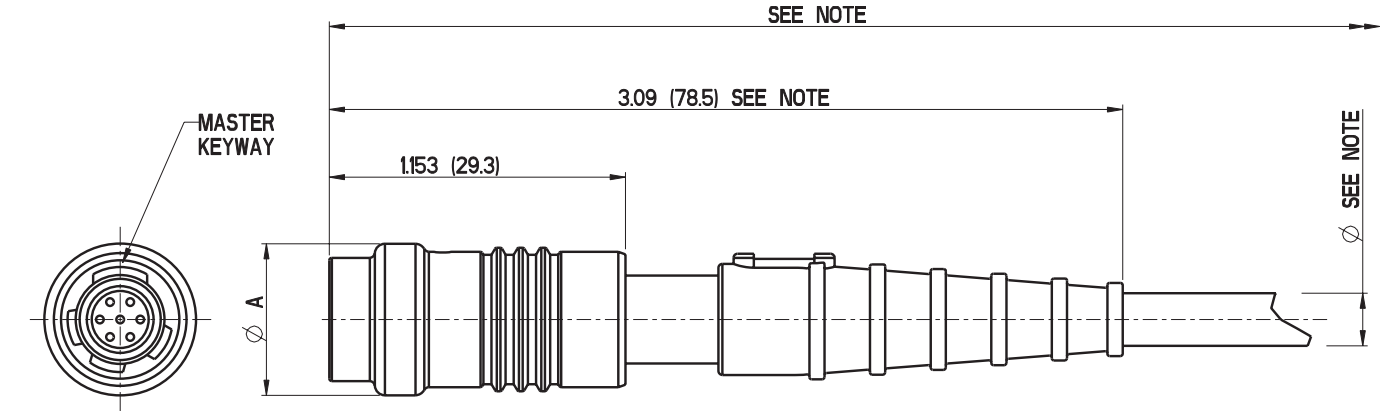

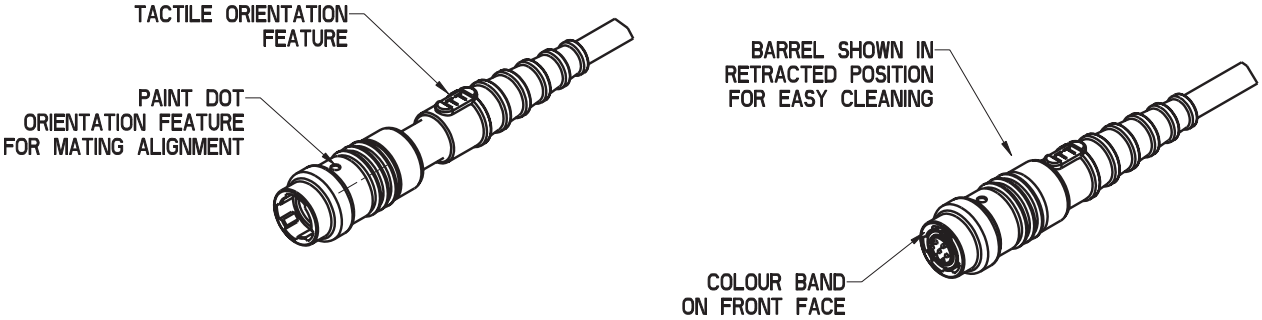

CONTACT ARRANGEMENT	DIMENSION A
7	0.591 (15.00)
14	0.699 (17.75)
19	0.748 (19.00)

For 37 & 55 data contact sales.

NOTE: These dimensions to be determined by customer cable requirements.

Receptacle Dimensions

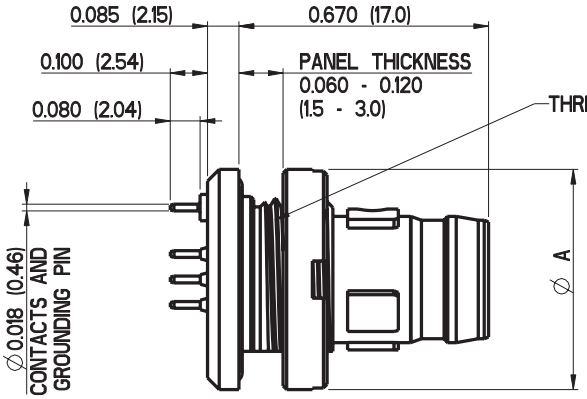

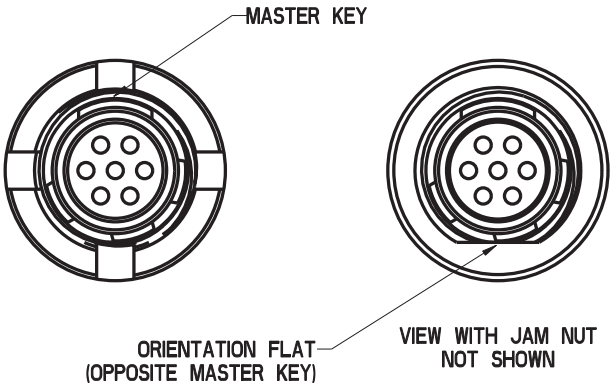

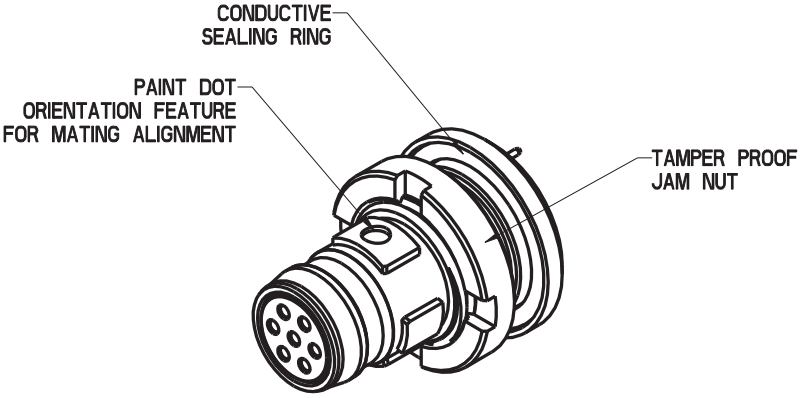

CONTACT ARRANGEMENT	DIMENSION A
7	0.591 (15.00)
14	0.709 (18.00)
19	0.768 (19.50)

For 37 & 55 data contact sales.

Panel Cut-out

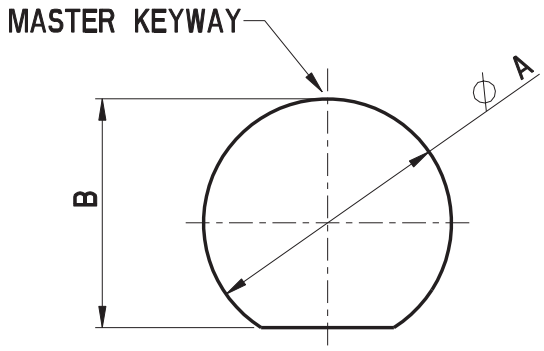

Contact Arrangement	Dimensions	
	A	B
7	0.457 (11.60)	0.421 (10.70)
14	0.575 (14.60)	0.539 (13.70)
19	0.634 (16.10)	0.596 (15.15)

For 37 & 55 data contact sales.

Color Coding

POLARISATION LETTER	COLOR CODING
N	BLUE
A	RED
B	GREEN
C	GREY
D	YELLOW

PCB Layout

General tolerance + -0.001 (0.03) TYP, for ground pins + -0.002 (0.05) TYP

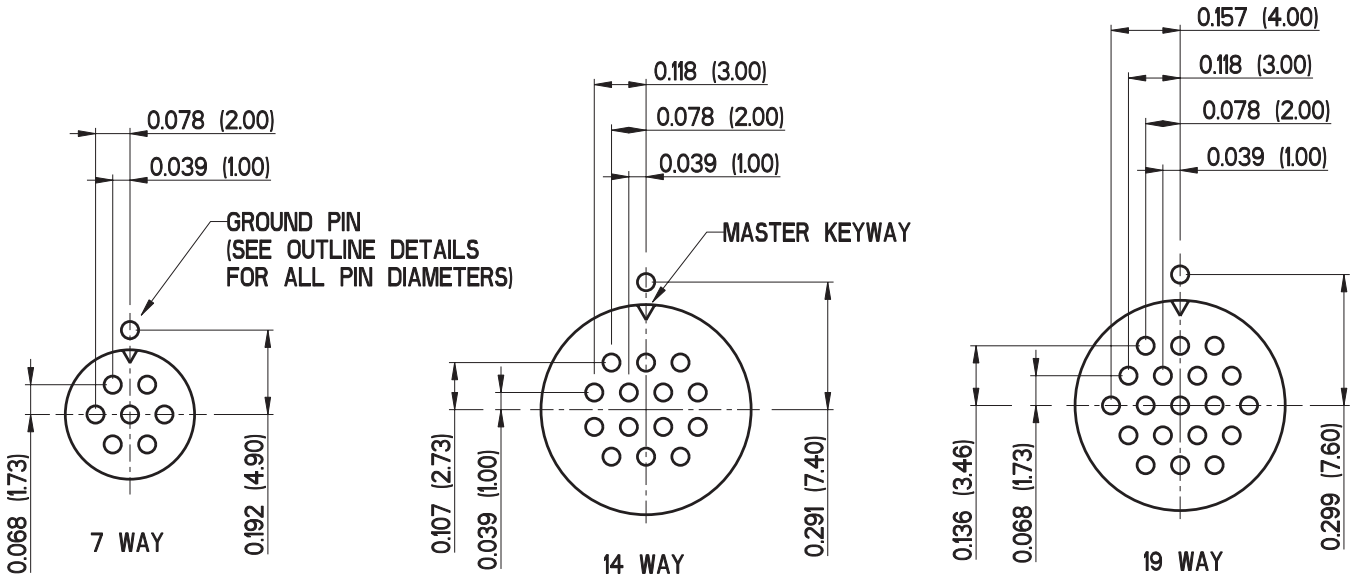

Standard contact layouts viewed from the mating face (not to scale)

Dimensions shown in inches (mm)
Specifications and dimensions subject to change

Nemesis High Mating
NEM-HM

Overview

ITT ICS's Super Clean Connector is a lightweight, robust, watertight solution designed for military, commercial and industrial applications. The connector features pogo pin technology utilizing ITT's unique spring probe pin/pad contact system for a durable and long life connection.

Specifications

Contact Type	Cable receptacle crimp or solder, box plug PCB
Contacts	Plugs = pogo pins, receptacles = pogo pads
Wire Size	24 - 32 AWG
Contact Rating	2 Amps continuous, 3 Amps peak
Voltage Rating	50 Vdc
Insulation Resistance	5,000 Mohm minimum
Dielectric Withstand Voltage	500 Volts
Operating Temperature	-55°C to +125°C
Contact Resistance	15 mOhm maximum
Vibration	20 g's in accordance with MIL-STD-1344 Method 2005, Condition IV
Shock	50 g's in accordance with MIL-STD-1344 Method 2004, Condition E
Durability	10,000 cycles
Plating	RoHS compliant 500 hour salt spray resistant black zinc nickel or electroless nickel
Receptacle Mounting**	Tamper proof jam nut
Receptacle Sealing	Using a conductive 'O' ring, non-conductive 'O' rings are available
EMI Shielding	50db attenuation 100Mhz to 1000Mhz in terminated condition
Coupling	Snap on/Breakaway, Bayonet, Push Pull
Coding	5 polarizing positions; N, A, B, C, and D
Coding Identification	Individual colors with colored dot on both parts plus indication on the boot; N=blue, A=red, B=green, C=grey and D=yellow
Boot	Cable dependant, either overmoulded or adhered
Sealing	IP67
Layouts	7, 14, 19, 37 & 55
Shell to Shell Resistance	<10 mOhm
Blind Mate	Yes
Cable	ITT standard or customer specified
Cable Earth Termination	360° cable braid termination to the shell
Snap on/Breakaway Forces	30N
Strain Relief	Designed to withstand a 10Kg pull off force minimum
Materials	Shells - Stainless Steel Insulators - Polyester Seals - Fluorosilicone rubber Contacts - Copper alloy with gold over nickel plating

How to Order

NEM	-	HMSB	-	7	14	PG	N	T	-	XXX	B

Product **NEM-HM**

	Plug	Receptacle	
Coupling Style:	SB	SB	Snap-on/Breakaway
	BY	BY	Bayonet (contact sales)
	PP	PP	Push Pull (contact sales)
Shell Style:		1	Free Receptacle (contact sales)
	6		Plug
		7	Jam Nut Receptacle**
	8		90° right angle plug (contact sales)
	9		Jam Nut Plug
Contact Arrangement:	7	7	
	14	14	
	19	19	
	37	37	Contact Sales for Availability
	55	55	Contact Sales for Availability
Contact Type:	PG		Pogo Contact
		PP	Pogo Pad Contact
Polarising Positions:	N	N	Normal
	A, B, C & D	A, B, C & D	Alternatives
Termination Type:	C	C***	Crimp Contacts
	T****	T	Straight PCB Tails
Termination Code:	XXX	XXX	Contact Sales for Wire and Cable Options
Finish Code:	B	B	Black Zinc Nickel
	N	N	Electroless Nickel

For the full range of plating options, contact sales.

** Requires special tool, part numbers T4909/02 for 7 way, T4909/03 for 14 way & T4909/04 for 19 way

*** Crimp contacts for free receptacles only

**** Straight PC Tails for jam nut plug only

High Mating plugs are inter-mateable with Super Clean receptacles. If this is not suitable for your application non-preferred V, W, X, Y & Z coding may be used, contact sales for availability

Contact Arrangements

Face View, Pogo Pin Contacts

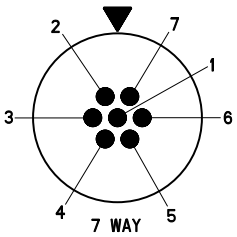

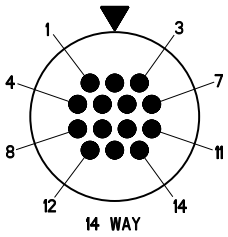

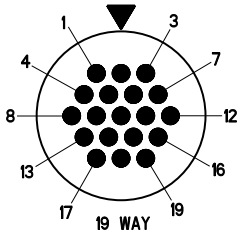

Cavity identification numbers are for reference only; they do not appear on connectors.

Plug Dimensions

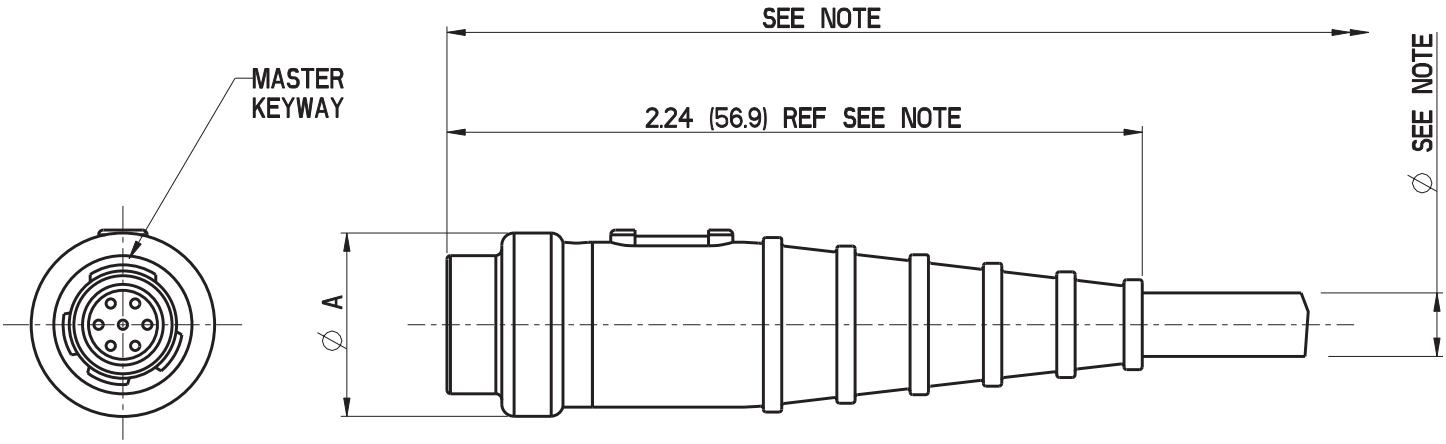

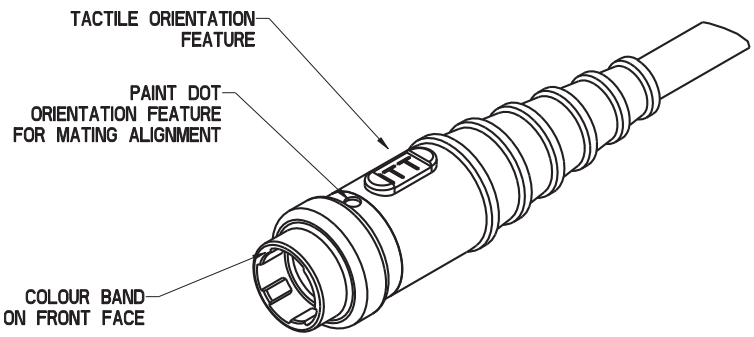

CONTACT ARRANGEMENT	DIMENSION A
7	0.591 (15.00)
14	0.699 (17.75)
19	0.748 (19.00)

For 37 & 55 data contact sales.

NOTE: These dimensions to be determined by customer cable requirements.

Dimensions shown in inches (mm)
Specifications and dimensions subject to change

Receptacle Dimensions

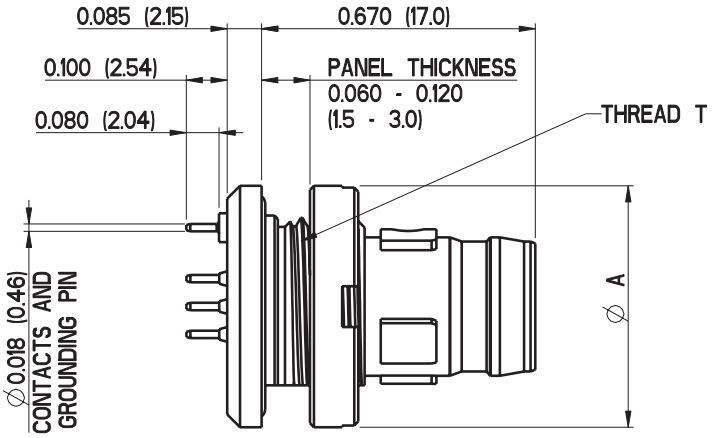

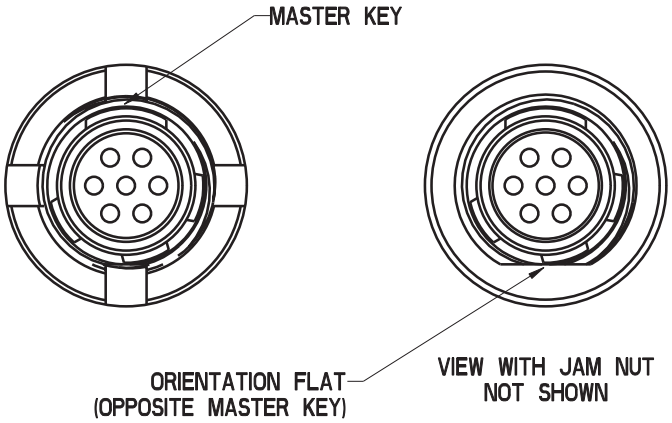

CONTACT ARRANGEMENT	DIMENSION A
7	0.591 (15.00)
14	0.709 (18.00)
19	0.768 (19.50)

For 37 & 55 data contact sales.

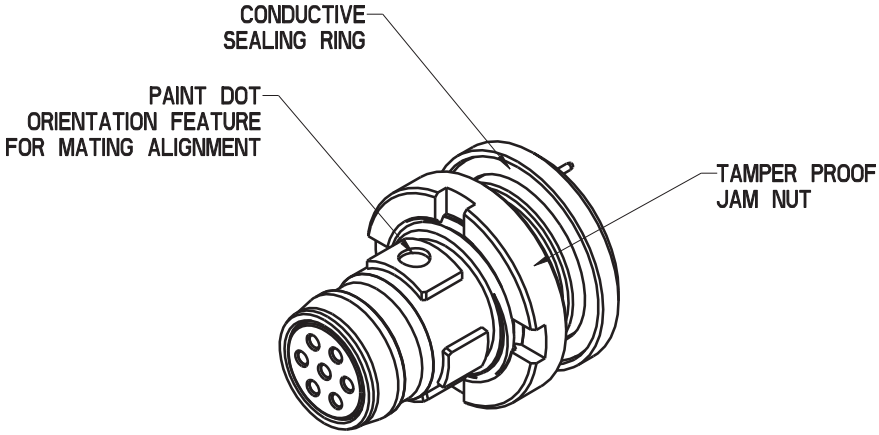

Panel Cut-out

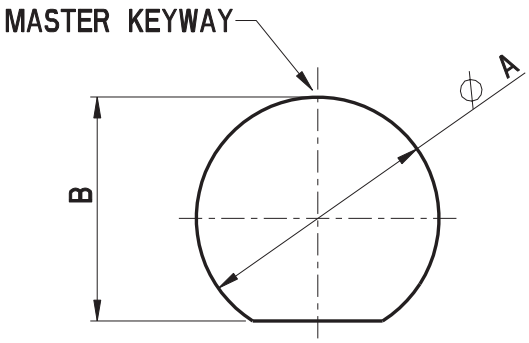

Contact Arrangement	Dimensions	
	A	B
7	0.457 (11.60)	0.421 (10.70)
14	0.575 (14.60)	0.539 (13.70)
19	0.634 (16.10)	0.596 (15.15)

For 37 & 55 data contact sales.

Color Coding

POLARISATION LETTER	COLOR CODING
N	BLUE
A	RED
B	GREEN
C	GREY
D	YELLOW

PCB Layout

General tolerance + -0.001 (0.03) TYP, for ground pins + -0.002 (0.05) TYP

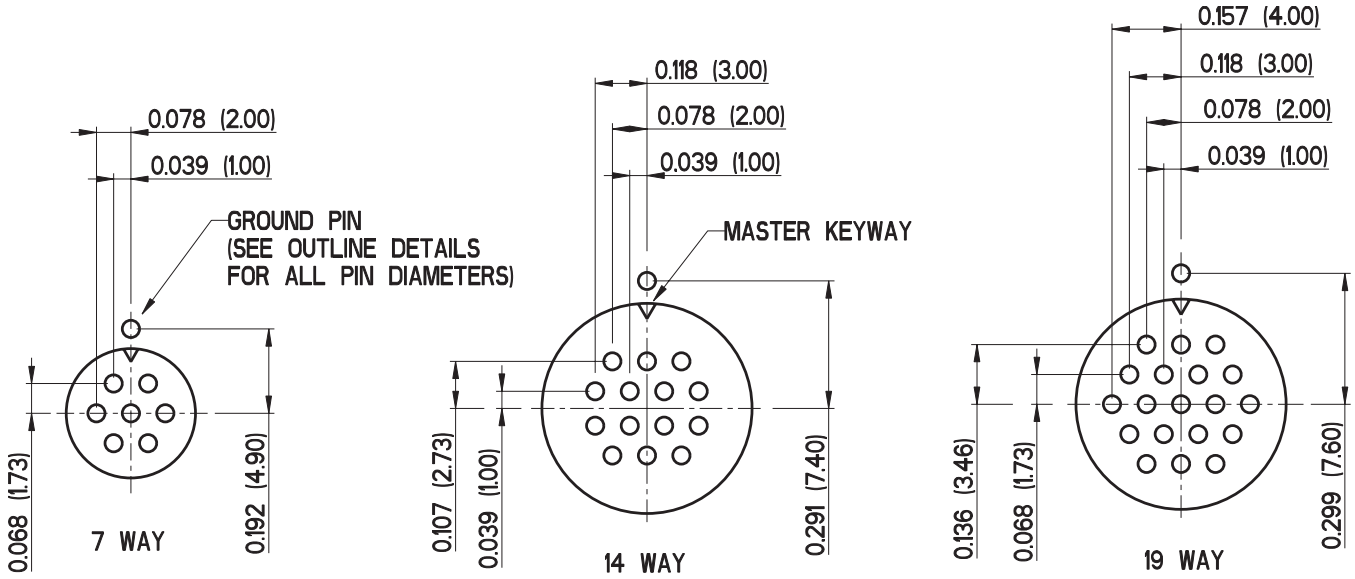

Standard contact layouts viewed from the mating face (not to scale)

Dimensions shown in inches (mm)
Specifications and dimensions subject to change

Twist Pin Contact Technology

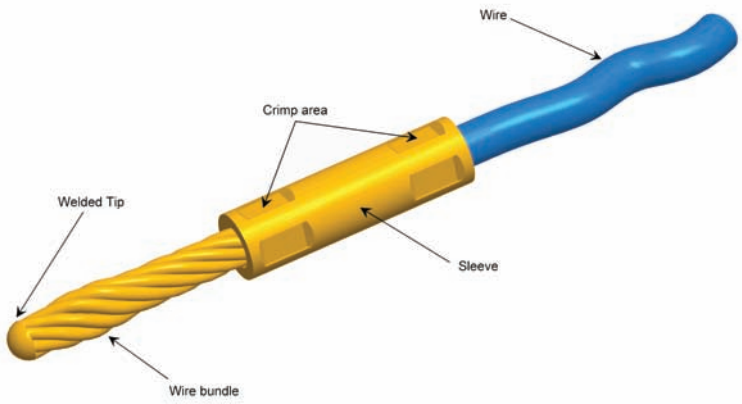

Pos-B-Line Contact Alignment

The flexible twist-pin is recessed into the insulator and the rigid socket is exposed, reversing the traditional positions of pin and socket. During mating, the socket is guided into the pin insulator by the lead-in chamfer. The pin is kept from flexing beyond the socket capture radius by the walls of the cavity. The hemispherical weld of controlled radius at the tip of the pin combines with the lead-in chamfers of the socket contact and the pin insulator to carn the pin into alignment. By controlling the welding process and the dimensions of the socket contact and the insulators, it is impossible for the recessed pin to escape the socket capture radius.

Twist Pin Contact Technology

The Nemesis Water Tight connector uses the twist pin contact system. This system was originally developed in the early 1960s and ITT was one of the original interconnect companies to license this technology and improve it. Our forty-five years of experience in manufacturing and establishing a fully automated manufacturing system for this contact has truly given ITT the foremost knowledge in twist pin contact technology.

As the core of the Water Tight connector, the twist pin contact offers a superior electrical and mechanical system that outperforms traditional machined or stamped electrical contract systems. ITT's twist pin system consists of the Micro Socket and the Micro Pin or Twist Pin.

Figure 1

The twist pin contact system consists of several stranded cores making up the wire bundle. The strands are subsequently heat treated and a weld is performed on the tip of each contact. Crimp sleeves are then inserted over the contact and crimp areas are defined to produce a seamless crimp system. The entire twist pin system is referred by ITT as a Pos-A-Line contact alignment system. Our reference to this system identifies that the flexible twist pin is recessed into the insulator and the rigid socket is exposed thus reversing the traditional positions of the pin and socket. During the mating sequence, the socket is guided into the pin insulator by the lead-in chamfer. The pin is kept from flexing beyond the socket capture radius by the walls of the cavity. The hemispherical weld of controlled radius at the tip of the pin combines with the lead-in chamfer of the socket contact and the pin insulator to cam the pin into alignment. ITT has developed a very robust Six Sigma manufacturing process that controls the welding process as well as the dimensions of the socket contact and insulator material. The net result is a contact system that makes it impossible for the recessed pin to escape the socket capture radius.

The advantages of ITT's twist pin contact system are many and have been field proven in the most demanding applications and environments for over forty-five years. Some of these advantages include:

- Seven points of electrical contact
- Contact and crimp sleeve materials carefully optimized for extremely reliable crimps—No design tradeoffs
- Seamless crimp sleeves
- Multiple 4-indent wire crimps standard
- High mating cycles
- High current handling capabilities
- System qualifications in numerous Aerospace, Defense Electronic, and high temperature Geophysical applications

Pogo Contact Technology

The heart of the Nemesis Super Clean & High Mating connector solutions is ITT's unique spring probe pin/pad contact system. ITT's spring probe contact design utilizes an internal clip mechanism that stays in constant contact with the contact itself. This design helps to reduce electrical resistance. In addition, the spring probe contact system accommodates misalignment issues, making the contact system much more forgiving. This feature along with the high durability of mating cycles allows this contact system to offer higher performance in harsh environments.

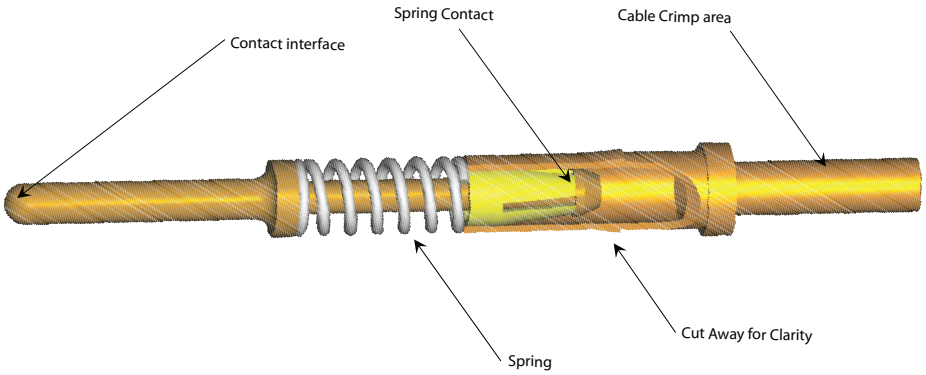

The unique ITT spring probe system mates with individual touch pad contact areas. This design allows for a very effective electrical engagement point of contact. Further, the spring probe contact system and touch pads allow for ease of cleanability in the field where dirt, moisture, mud, sand, and other contaminants may be present. The individual touch pad contacts incorporate no crevices for contaminants to accumulate, a desirable feature in harsh environment field conditions.

The Nemesis Super Clean & High Mating connectors using spring probe contact technology offer the highest reliability for interconnects meeting the toughest performance standards in harsh environments. They have been tested through extensive Military and customer specific test programs to ensure that their design and manufacturability features have indeed met all reliability and field performance requirements. Because ITT's spring probe contact/connectors have been designed and manufactured to exceed various thermal shock, vibration, random shock, and signal performance spectrums this connector technology is becoming one of the technologies of choice in harsh environment electronic systems.

The Challenge

ITT has a long history of providing standard and custom MIL-DTL-38999 connectors which meet the most stringent military requirements. ITT's major military and commercial accounts recently approached us requesting that we take our proven high reliabilty designs and shrink them to decrease weight and size while maintaining the connectors robust environmental performance and high reliability. Along with these requests, ICS received substantial commentary from other markets including Medical, Industrial, and Space, requesting a similar, miniature circular product.

MKJ connector provides significant size and weight reduction while providing electrical and mechanical characteristics of larger connectors

Split tine contact design provides proven reliability in harsh environments

Connector uses size 23 contacts accepting #22 to #28 wire. Contact spacing is reduced to 0.076 inches providing a compact yet robust package.

Master key and 2 secondary keys allow multiple clocking positions

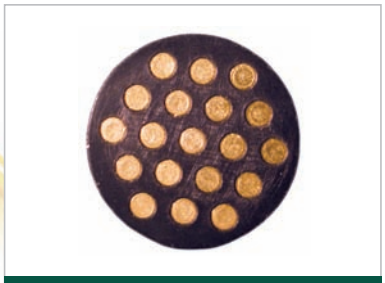

Pogo pin/pad technology. Touch pad contacts increase ease of cleanability, highly desireable in harsh environments.

Intergral band platform allows direct attachment of cable shield to connector.

Double start threads prevent thread damage and allow full connector mating in 1.5 turns. Durable design ideal for harsh shock and vibration environments.

Breakaway design incorporates a simple push/pull mating mechanism allowing quick connector disconnect.

The ITT Solution ...

ITT took on the challenge, driving innovation in mating capabilities and contacts to reduce size and weight while maintaining the high level of quality customers have come to expect from ITT over 90 years of engineering excellence. ITT collated a substantial amount of industry VOC from top tier military and commercial accounts. This feedback arrived from industry leading ICS customers, pioneering products in their fields including satellites & missiles, test and medical equipment, and tactical battlefield gear. Using this information and leveraging our historical product expertise, ITT engineered a product meeting our customers defined mix of Design, Functionality, and Flexibility. The result of this process represents our innovative new product line, Trinity. Offering three coupling methodologies {threaded, bayonet, and breakaway} and a highly engineered design, this innovative product reduces weight and size without sacrificing robust environmental performance or reliability. ITT ICS is proud to introduce our exciting new Trinity product line, engineered to the stringent quality standards for which ITT is world renown.

Technical overview

The Trinity MKJ family of mini circular connectors provides approximate electrical and mechanical characteristics of larger and heavier Military Standard Environmental connectors while reducing weight up to 71% and size up to 52%. All MKJ series connector's shells and jam nuts are available in high quality aluminum alloy or corrosion resistant steel per AMS-QQ-S 763. The MKJ series comes with rear accessory thread or integral band platform for direct attachment of cable shield and overmold. The MKJ series of connectors come with a variety of coupling mechanisms: threaded, breakaway, and bayonet. In addition, a Pogo Pin technology utilizing ITT's unique spring probe pin/touch pad contact system is available. The MKJ series receptacle comes with a variety of mounting options for both crimp and PCB contacts including in-line, jam nut, front mount, and square flange mount, and flange mount. The MKJ0, MKJ1, MKJ3, MKJ4, and MKJ5 feature a master key and 2 secondary keys for positive mating with 4 clocking positions available. The MKJ0 connector is ideal for everyday operations where size and weight are at a premium. The MJK1 connector uses a double start thread coupling with 1/1/2 turns for a full mate and is ideal for harsh shock and vibration environments. The MKJ3 connector can be fully mated in a 1/4 turn. The MKJ4 connector provides a quick push to mate / pull to unmate disconnect mechanism for fast breakaway connections. The MKJ5 connector utilizes a triple start thread and is fully mated in 1 turn, and is an ideal connector for harsh shock and vibration environments and offers an internal coupling ratchet mechanism along with an EMI grounding spring.

Product Features

- High contact density: size 23 contacts accommodate #22 - #28 wire and allowing 0.076 inch contact spacing
- Available with 3-85 rear release crimp or PCB contacts
- Master key with 2 secondary keys. 4 clocking positions available
- Significant weight and size reduction compared to traditional Mil Standard environmental connectors
- Available in jam nut, in-line, and square flange rear crimp receptacle versions. Jam nut and square flange PCB receptacle versions
- Rear accessory thread or integral band platform for direct attachment of cable shield or overmold
- Wire seal grommet for rear environmental sealing. Pin fluorosilicone interfacial seal provides interface sealing
- Available with double start threads allowing full mating in 1.5 turns
- Available with quick push/pull breakaway mechanism utilizing canted retention spring for quicker mating and demating
- Available with bayonet 1/4 turn locking mechanism
- Available with Pogo Pin technology utilizing ITT's unique spring probe pin/pad contact system

Applications

- Medical equipment: test and diagnostic
- Industrial equipment
- Commecial and militray aircraft electronics
- Unmanned aerial vehicles
- Missile systems
- Avionic systems
- Satellites
- Sensors
- Instrumentation
- Interconnections for helmets, weapons, battery packs, night vision goggles, aircraft headsets, etc.
- Navigation and Telemetry equipment
- Ruggedized computers and hand held communications equipment

MKJ Connector Styles

MKJ0

UNC Thread Coupling

MKJ3

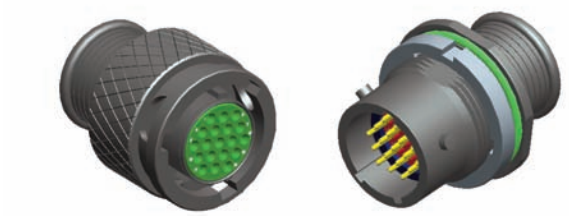

Bayonet Coupling

MKJ1

Double Start Thread Coupling

MKJ4

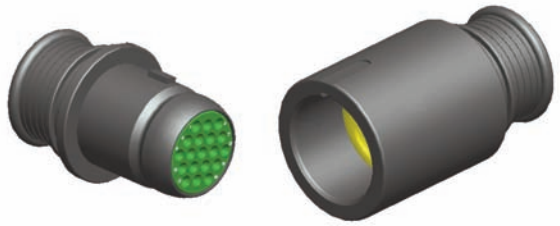

Breakaway Coupling

MKJ5

Triple Start Ratchet Locking

Multiple Styles for all applications!

Series MKJ Performance	
Contact size / Spacing	#23 / 0.076 inches (1.9 mm)
Contact Type	Solder Cup, Rear Crimp or PCB Mount
Wire Accomodation	#22 - #28 AWG
Current Rating	5 Amps Maximum
Voltage Rating	500 VAC RMS Sea Level
Insulation Resistance	5000 Megaohms Minimum
Operating Temperature	-55 degrees C to +150 degrees C
Contact Resistance	8 Milliohms Maximum
Vibration	20 g's in Accordance with MIL-STD-1344 Method 2005, Condition IV
Shock	300 g's (MKJ1) 50 g's (MKJ0 and MKJ4) in Accordance with MIL-STD-1344 Method 2004, Condition E
EMI Shielding Effectiveness	40dB Attenuation, 100 MHz to 1000 MHz
Coupling	Threaded, Quick Disconnect Pogo Pin
Coding	Master key and 2 secondary keys. 4 clocking positions available
Housing material	Aluminum and Stainless Steel
Layouts	31 layouts holding from 1 size 12 contact to 85 size 23 contacts
Usage	Medical, Military, Commercial, and Industrial
Receptacle Mounting	Jam Nut, Square Flange, In-line, PCB

Electrical specifications for the connector

The MKJ series of products uses size 23 pin and socket contacts with equivalent electrical performance of size 22 contacts. These smaller contacts accept #22 - #28 AWG wire and allow the contact spacing to be reduced down to 0.076 inches. The connector's Fortron dielectric insulating material can accommodate from 3 to 85 contacts in various shell sizes. This high density packaging, along with a reduced wall thickness and scoop, allows a dramatic decrease in size and weight of the MKJ connector while retaining the approximate mechanical and electrical characteristics of heavier and larger Military Standard Enviromental connectors. The connector is capable of operating between -55 degrees Celsius and +150 degrees Celsius and can be mated up to 2,000 cycles. Maximum electrical current is 5 Amps and maximum voltage at sea level is 500 VAC RMS.

Max. Voltage	Max. Current	Operating Temp	Durability
500 VAC RMS Sea Level	5 Amps Maximum	-55 degrees C to +150 degrees C	2,000 mated cycles

MKJ Product Line Talking Dog

MKJ1	C	2	F	9-19	P	N	**

MKJ1 — **SERIES**
MKJ0 - Threaded Coupling, UN Thread
MKJ1 - Threaded Coupling, Double Start ACME Thread
MKJ3 - Bayonet Coupling
MKJ4 - Breakaway/Quick Disconnect
MKJ5 - Threaded Coupling, Triple start ACME Thread

C — **CLASS**
A - Environmental Plug and Receptacle with Banding/Overmolding Platform
B - Environmental Plug and Receptacle with Threaded Accessory Attachment
C - Back- Potted Receptacle

2 — **SHELL STYLE**
1 - In-Line Receptacle
2 - Square Flange Receptacle
6 - Straight Plug
7 - Jam Nut Receptacle

F — **MATERIAL/PLATING**
C - Aluminum/Anodize, Black
F - Aluminum/Electroless Nickel
W- Aluminum/OD Cad
Z - Aluminum/Zinc Nickel, Black
K - SS/Passivated
Y - SS/Zinc Nickel, Black

9-19 — **SHELL SIZE/CONTACT ARRANGEMENT**

5-3	3 Size 23 Contacts	Series MKJ0, MKJ1, MKJ3, MKJ4
6-1	1 Size 16 Contact	Series MKJ0, MKJ1, MKJ3, MKJ4
6-4	4 Size 23 Contacts	Series MKJ0, MKJ1, MKJ3, MKJ4
6-6	6 Size 23 Contacts	Series MKJ0, MKJ1, MKJ3, MKJ4
6-7	7 Size 23 Contacts	Series MKJ0, MKJ1, MKJ3, MKJ4
7-10	10 Size 23 Contacts	Series MKJ0, MKJ1, MKJ3, MKJ4
8-4	4 Size 23 Contacts	Series MKJ5
8-6	6 Size 23 Contacts	Series MKJ5
8-7	7 Size 23 Contacts	Series MKJ5
8-13	13 Size 23 Contacts	Series MKJ0, MKJ1, MKJ3, MKJ4
9-4	4 Size 16 Contacts	Series MKJ0, MKJ1, MKJ3, MKJ4
9-10	10 Size 23 Contacts	Series MKJ5
9-19	19 Size 23 Contacts	Series MKJ0, MKJ1, MKJ3, MKJ4
10-13	13 Size 23 Contacts	Series MKJ5
10-26	26 Size 23 Contacts	Series MKJ0, MKJ1, MKJ3, MKJ4
11-19	19 23 Contacts	Series MKJ5
12-26	26 Size 23 Contacts	Series MKJ5
12-37	37 Size 23 Contacts	Series MKJ0, MKJ1, MKJ3, MKJ4
13-37	37 Size 23 Contacts	Series MKJ1
14-55	55 Size 23 Contacts	Series MKJ0, MKJ3, MKJ4
15-37	37 Size 23 Contacts	Series MKJ5
15-55	55 Size 23 Contacts	Series MKJ0, MKJ3, MKJ4
16-55	55 Size 23 Contacts	Series MKJ1
17-85	85 Size 23 Contacts	Series MKJ1
18-55	55 Size 23 Contacts	Series MKJ5
19-85	85 Size 23 Contacts	Series MKJ5

P — **CONTACT STYLE**
P - Pin, Crimp, Removable
S - Socket, Crimp, Removable

A - Pin, PC Tail, .0.062 Extension
B - Pin, PC Tail, 0.109 Extension
C - Socket, PC Tail, 0.062 Extension
D - Socket, PC Tail, 0.109 Extension
G - Pin, Pogo, Crimp, Removable
O - Pad, Pogo, Crimp, Removable
L - Pin, Solder Cup
R - Socket, Solder Cup

N — **SHELL CLOCKING (POSITION)**
MKJ0 Series
N - Normal
X - Clocking Position X
Y - Clocking Position Y
Z - Clocking Position Z
MKJ1 Series
A - Normal 150° 210°
B - Clocking Position B 75° 210°
C - Clocking Position C 95° 230°
D - Clocking Position D 140° 275°
MKJ3 Series
N - Normal 150° 210°
X - Clocking Position X 75° 210°
Y - Clocking Position Y 95° 230°
Z - Clocking Position Z 140° 275°
MKJ4 Series
Omit for Single Key/Keyway
A - Normal 150° 210°
B - Clocking Position B 75° 210°
C - Clocking Position C 95° 230°
D - Clocking Position D 140° 275°
MKJ5 Series
A - Normal 150° 210°
B - Clocking Position B 75° 210°
C - Clocking Position C 95° 230°
D - Clocking Position D 140° 275°

****** — **MODIFICATION CODES**
F0 - Less Contacts ("F0" not printed on connector)
(No modification code required for standard product)
Consult Factor for other codes

Dimensions shown in inches (mm)
Specifications and dimensions subject to change

MKJ0 Connectors

The MKJ0 is ideal for light duty applications where weight and cost take a precedence. The connector comes with 5 high density contact arrangements, multiple clocking positions, a banding platform, and rear grommets and pin interfacial seals. Used in avionics, aerospace, medical, and industrial applications.

Specifications

Contact Type	Rear crimp or PCB mount
Contacts	Size 23 (0.076" spacing), Size 16 (.177" spacing)
Wire Size	#22 - #28 AWG (Size 23 Contacts), #16 - #20 AWG (Size 16 Contacts)
Contact Rating	5 Amps Maximum
Voltage Rating	500 VAC RMS sea level
Insulation Resistance	5,000 Megaohms minimum
Operating Temperature	-55°C to +150°C
Contact Resistance	8 Milliohms maximum
Vibration	20 g's in accordance with MIL-STD-1344 Method 2005, Condition IV
Shock	50 g's in accordance with MIL-STD-1344 Method 2004, Condition E
Durability	2,000 mating cycles
Receptacle Mounting	Jam nut, PCB mount or Wall mount
EMI Shielding	40db attenuation, 100Mhz to 1000Mhz
Coupling	UN Threaded
Materials	Shells - Aluminum Alloy or Stainless Steel Insulators - Thermoplastic Seals - Flurosilicone Contacts - Copper alloy with gold over nickel plating

MKJ0 Plug (Banding Platform)

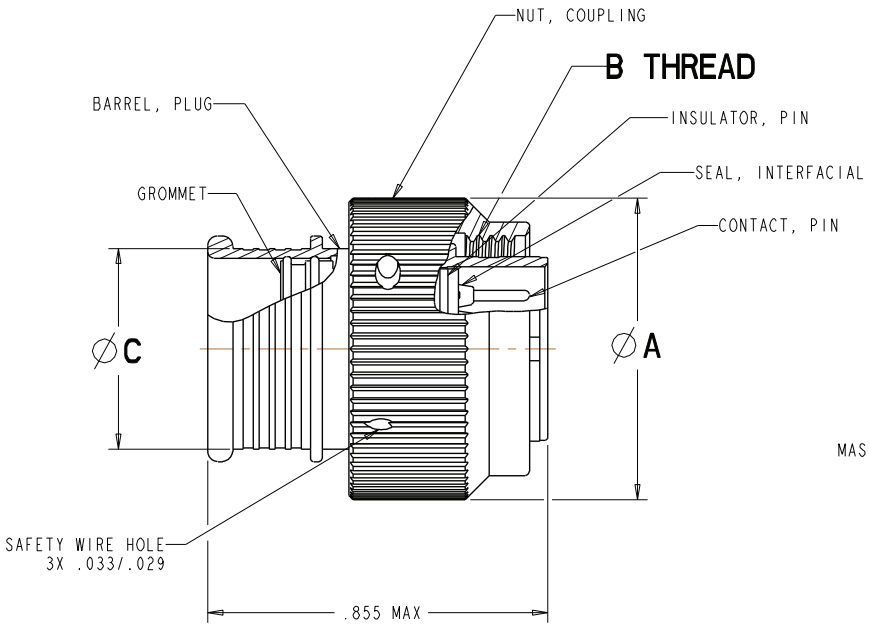

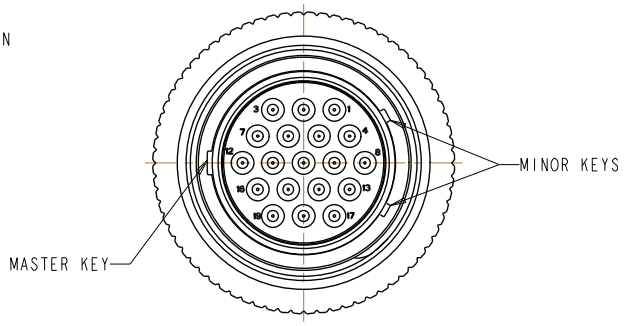

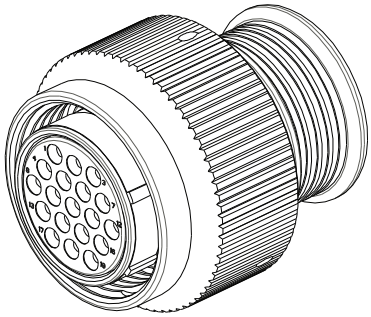

Socket Insert

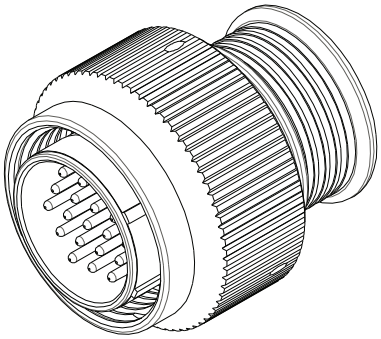

Pin Insert

MKJ0 PLUG DIMENSIONS					
LAYOUT	Ø A	B THREAD UN-2B	Ø C	MAX WEIGHT IN GRAMS	
				PIN	SOCKET
6-4	.500	.3750-28	.290	3.6	4.1
6-7	.500	.3750-28	.290	3.8	4.2
7-10	.620	.4375-28	.390	5.8	6.6
9-19	.750	.5625-32	.500	8.4	9.8
12-37	.880	.7500-28	.650	11.7	14.2

Dimensions shown in inches (mm)
Specifications and dimensions subject to change

MKJ0 Connectors

Plug Connector Orientation Front Side

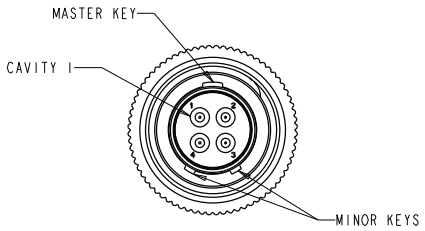

6-4 LAYOUT

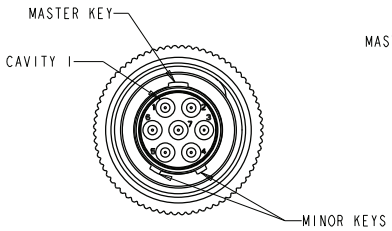

6-7 LAYOUT

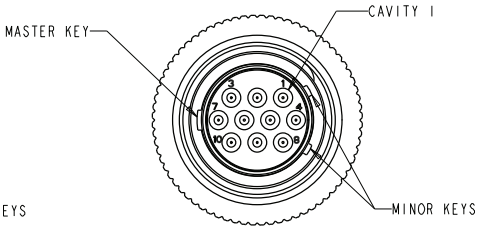

7-10 LAYOUT

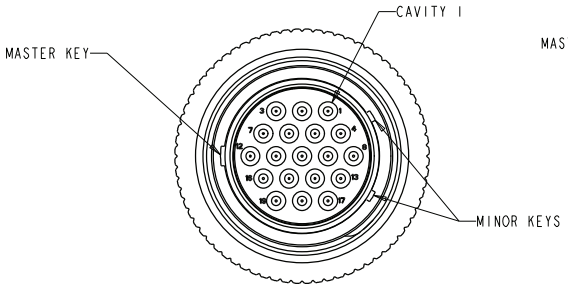

9-19 LAYOUT

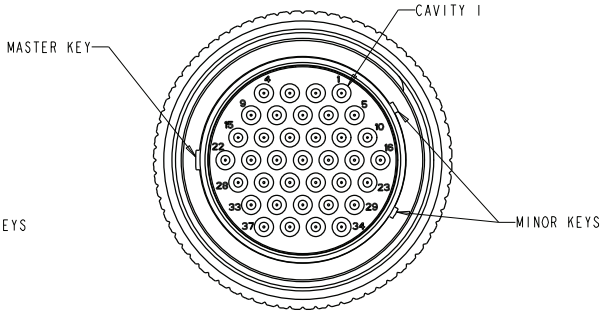

12-37 LAYOUT

Note: Pin insert front side shown for reference only. Socket insert is mirror image.

MKJ0 Plug Barrel Clocking Positions

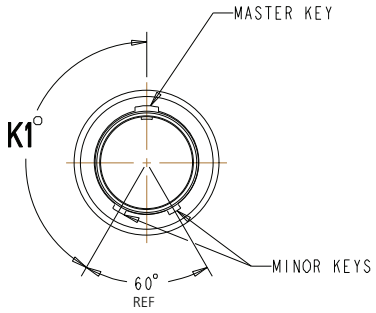

BARREL CLOCKING
ORIENTATION FOR SIZES 5 & 6
(N - CLOCKING SHOWN)

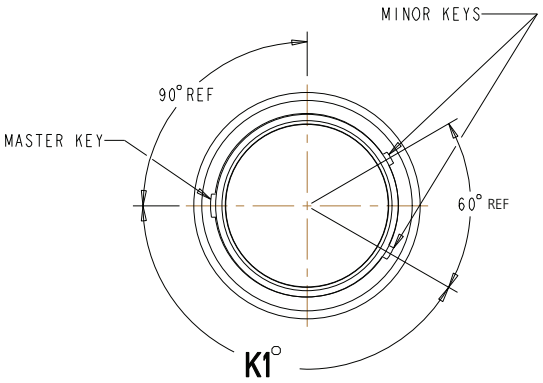

BARREL CLOCKING
ORIENTATION FOR SIZES 7 & UP
(N-CLOCKING SHOWN)

For Shell Sizes 5 and 6, the Master Key is at top dead center. For Shell Sizes 7 and up, the Master and Minor keys are rotated 90° counter-clockwise. Minor keys remain stationary, with the Master key rotating to achieve alternate clocking positions for all Shell Sizes.

BARREL CLOCKING	
POSITION	K1°
N (normal)	150°
X	140°
Y	130°
Z	120°

MKJ0 Jam Nut Receptacle (Banding Platform)

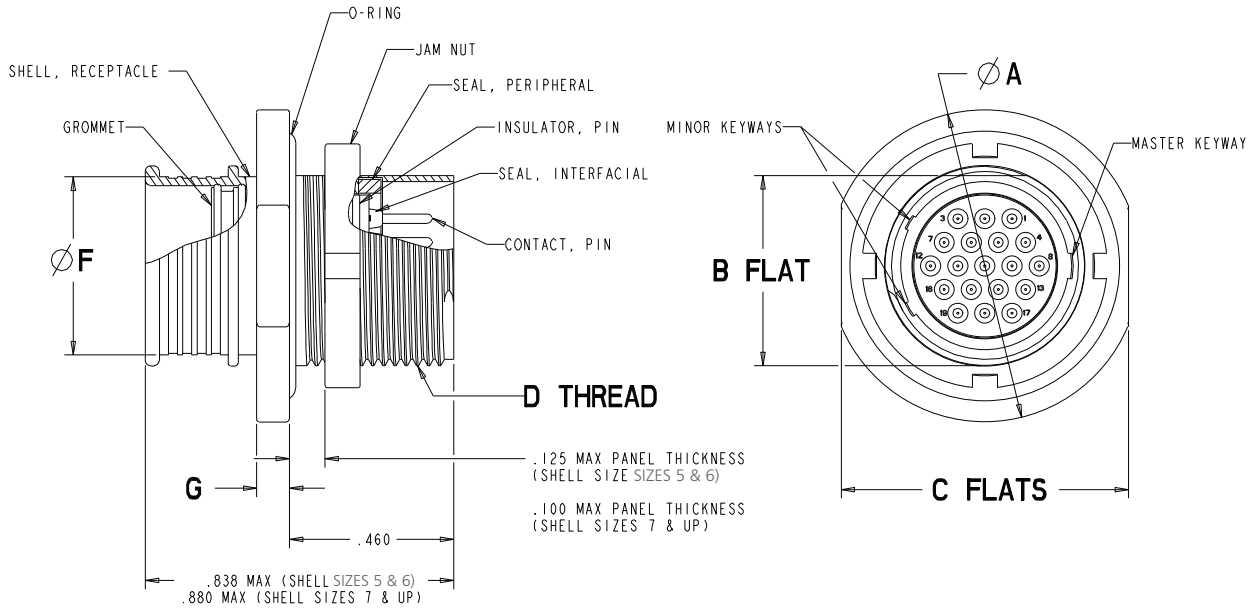

MKJ0 JAM NUT RECEPTACLE DIMENSIONS								
LAYOUT	Ø A FLANGE DIA.	B FLAT	C FLAT	D THREAD UN-2A	Ø F	G	MAX WEIGHT IN GRAMS	
							PIN	SOCKET
6-4	.610	.356	.562	.3750-28	.290	.051	3.3	3.8
6-7	.610	.356	.562	.3750-28	.290	.051	3.4	3.8
7-10	.670	.420	.635	.4375-28	.390	.093	4.9	5.7
9-19	.875	.534	.806	.5625-32	.500	.093	7.3	8.7
12-37	1.062	.714	.986	.7500-28	.650	.093	11.6	14.4

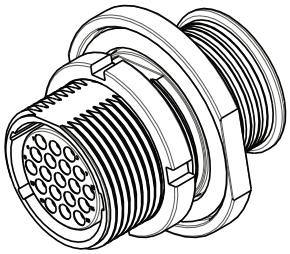

Socket Insert

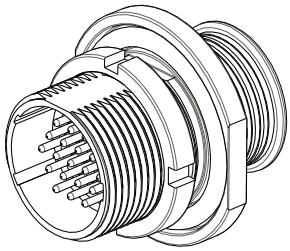

Pin Insert

Panel Cutouts

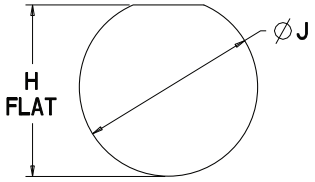

LAYOUT	H FLAT ±.002	Ø J
6 - 4	.363	.386
6 - 7	.363	.386
7 - 10	.426	.449
9 - 19	.540	.574
12 - 37	.722	.760

Dimensions shown in inches (mm)
Specifications and dimensions subject to change

MKJ0 Jam Nut Receptacle (PCB Mount)

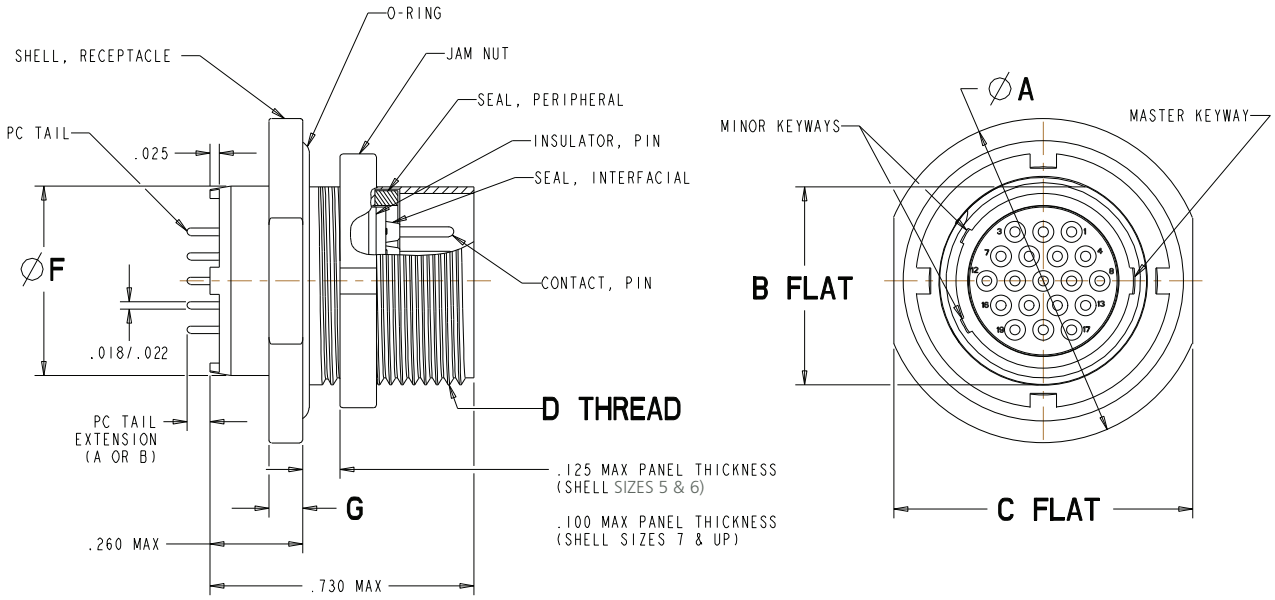

MKJ0 JAM NUT RECEPTACLE DIMENSIONS								
LAYOUT	Ø A FLANGE DIA.	B FLAT	C FLAT	D THREAD UN-2A	Ø F	G	MAX WEIGHT IN GRAMS	
							PIN	SOCKET
6-4	.610	.356	.562	.3750-28	.322	.051	3.5	4.0
6-7	.610	.356	.562	.3750-28	.322	.051	3.8	4.2
7-10	.670	.420	.635	.4375-28	.432	.093	5.3	6.2
9-19	.875	.534	.806	.5625-32	.512	.093	8.1	9.7
12-37	1.062	.714	.986	.7500-28	.677	.093	13.7	16.6

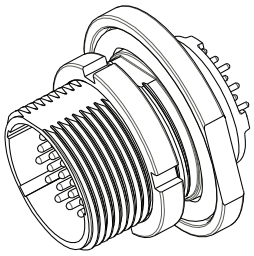

Pin Insert

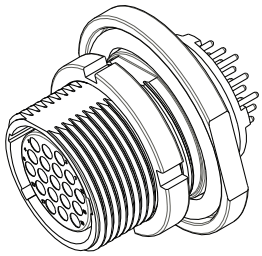

Socket Insert

Panel Cutouts

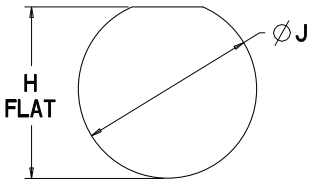

LAYOUT	H FLAT ±.002	Ø J
6 - 4	.363	.386
6 - 7	.363	.386
7 - 10	.426	.449
9 - 19	.540	.574
12 - 37	.722	.760

Receptacle Connector Orientation Front Side

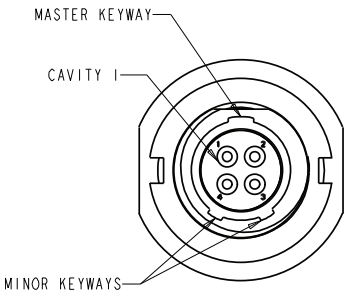

6-4 LAYOUT

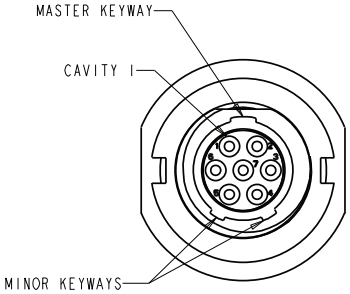

6-7 LAYOUT

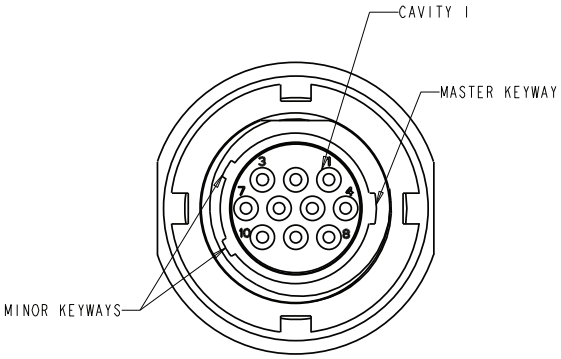

7-10 LAYOUT

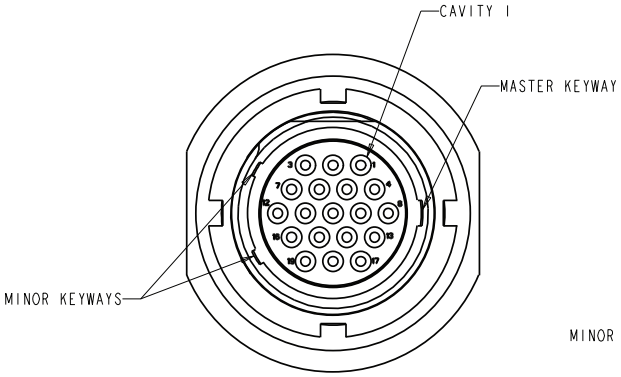

9-19 LAYOUT

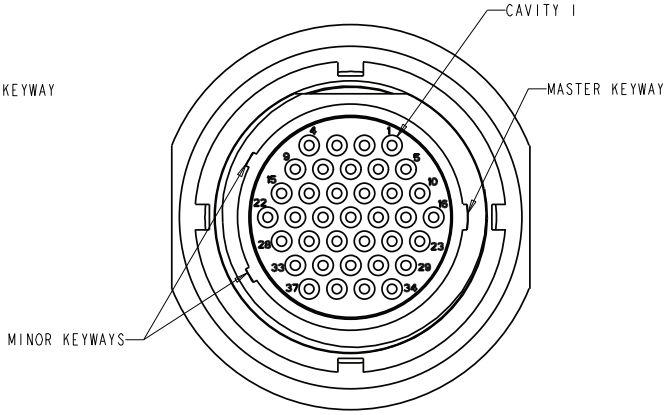

12-37 LAYOUT

Note: Pin insert front side shown for reference only. Socket insert is a mirror image.

MKJ0 Receptacle Shell Clocking Positions

For Shell Sizes 5 and 6, the Master Key is at top dead center. For Shell Sizes 7 and up, the Master and Minor keys are rotated 90° clockwise. Minor keys remain stationary, with the Master rotating to achieve alternate clocking positions for all Shell Sizes.

SHELL CLOCKING	
POSITION	K1°
N (normal)	150°
X	140°
Y	130°
Z	120°

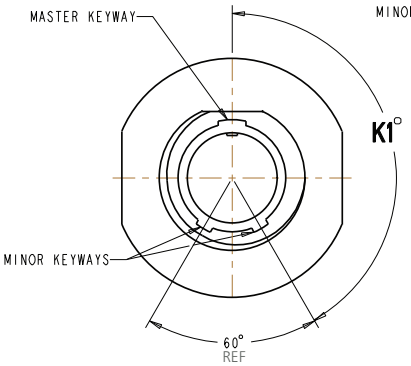

SHELL CLOCKING
ORIENTATION FOR SIZES 5 & 6
(N - CLOCKING SHOWN)

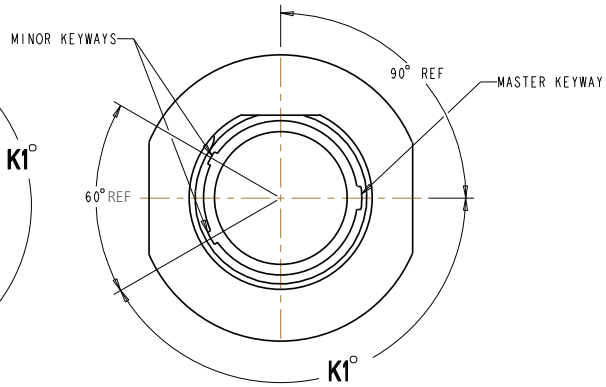

SHELL CLOCKING
ORIENTATION FOR SIZES 7 & UP
(N-CLOCKING SHOWN)

Dimensions shown in inches (mm)
Specifications and dimensions subject to change

MKJ1 Connectors

The MKJ1 is a robust connector meeting MIL-DTL-38999 shock and vibration requirements. Plug connector comes with an anti-decoupling spring for vibration resistance. Ideal for harsh environments where a robust electrical connection is required under the most demanding shock and vibration conditions. Proven design for avionics, satellites, and missile systems.

Specifications

Contact Type	Rear crimp or PCB mount
Contacts	Size 23 (0.076" spacing), Size 16 (.177" spacing)
Wire Size	#22 - #28 AWG (Size 23 Contacts), #16 - #20 AWG (Size 16 Contacts)
Contact Rating	5 Amps Maximum
Voltage Rating	500 VAC RMS sea level
Insulation Resistance	5,000 Megaohms minimum
Operating Temperature	-55°C to +150°C
Contact Resistance	8 Milliohms maximum
Vibration	40 g's in accordance with MIL-STD-1344 Method 2005, Condition IV
Shock	300 g's in accordance with MIL-STD-1344 Method 2004, Condition E
Durability	2,000 mating cycles
Receptacle Mounting	Jam nut or Wall Mount
EMI Shielding	40db attenuation, 100Mhz to 1000Mhz
Coupling	Double Start Threaded
Materials	Shells - Aluminum Alloy or Stainless Steel Insulators - Thermostatic Seals - Flurosilicone Contacts - Copper alloy with gold over nickel plating

MKJ1 Plug (Banding Platform)

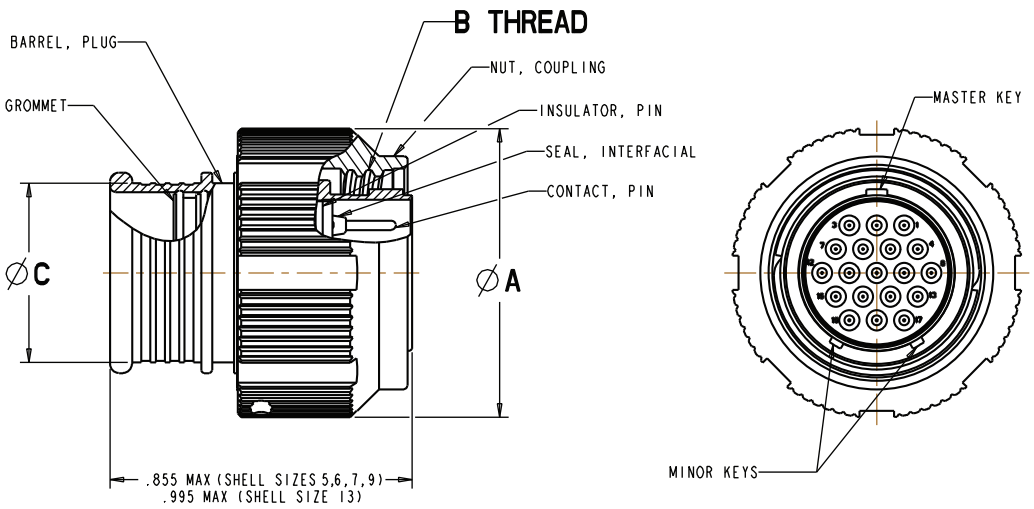

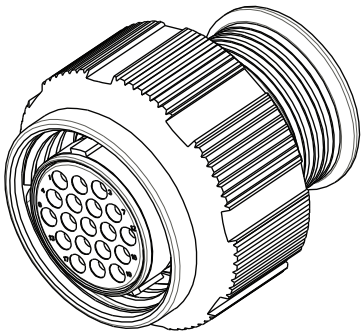

Socket Insert

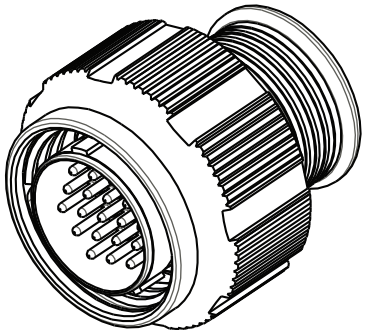

Pin Insert

MKJ1 PLUG DIMENSIONS					
LAYOUT	Ø A	B THREAD (ACME DOUBLE START)	Ø C	MAX WEIGHT IN GRAMS	
				PIN	SOCKET
6-4	.600	.375- .05P .1L -2B	.290	5.0	5.5
6-7	.600	.375- .05P .1L -2B	.290	5.1	5.5
7-10	.680	.4375- .05P .1L -2B	.390	6.9	7.7
9-19	.810	.5625- .05P .1L -2B	.500	9.4	10.9
13-37	1.050	.8125- .05P .2L -2B	.650	18.9	21.7

Dimensions shown in inches (mm)
Specifications and dimensions subject to change

MKJ1 Connectors

Plug Connector Orientation Front Side

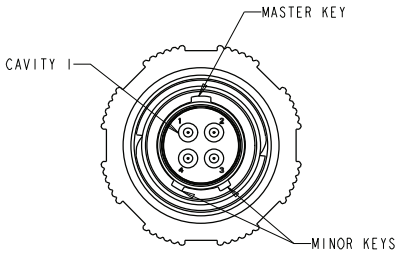

6-4 LAYOUT

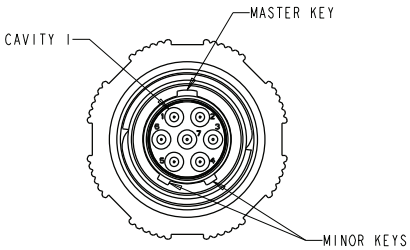

6-7 LAYOUT

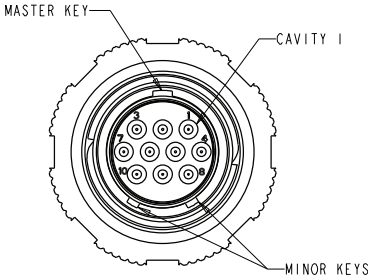

7-10 LAYOUT

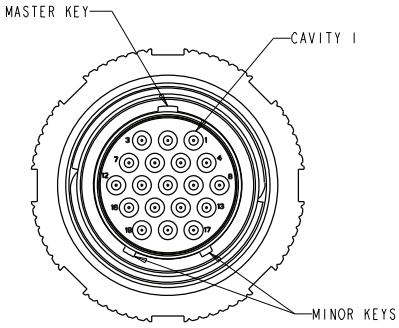

9-19 LAYOUT

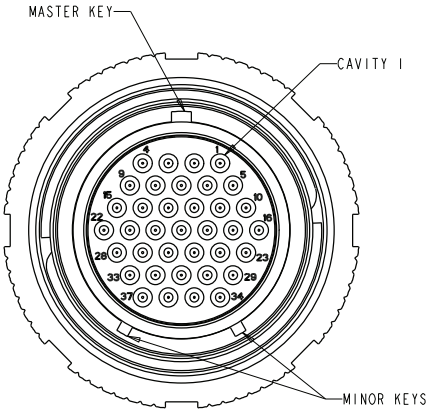

13-37 LAYOUT

Note: Pin insert front side shown for reference only. Socket insert is a mirror image.

MKJ1 Plug Barrel Clocking Positions

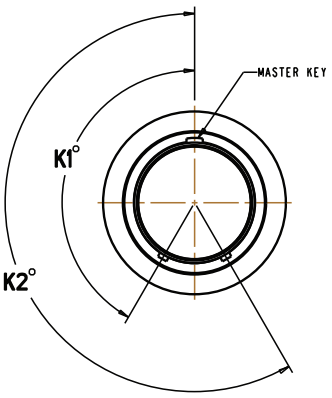

Barrel Clocking
(A- Clocking Shown)

Master keyway remains stationary at top dead center for all sizes and clocking.

BARREL CLOCKING		
POSITION	K1°	K2°
A (NORMAL)	150°	210°
B	75°	210°
C	95°	230°
D	140°	275°

MKJ1 Jam Nut Receptacle (Banding Platform)

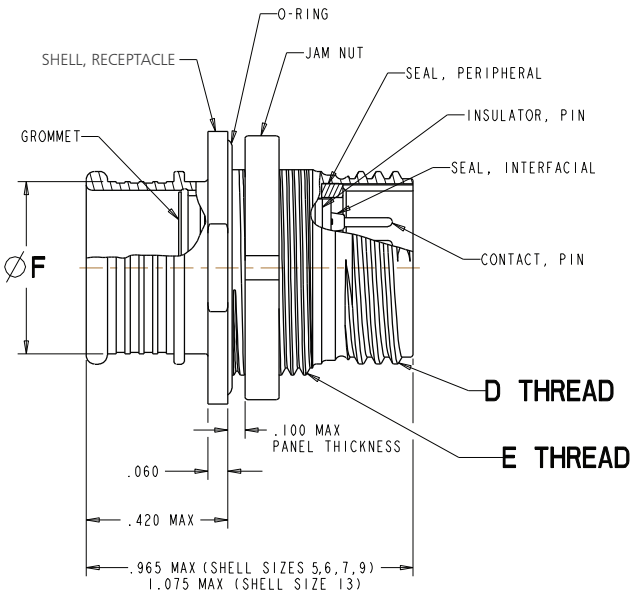

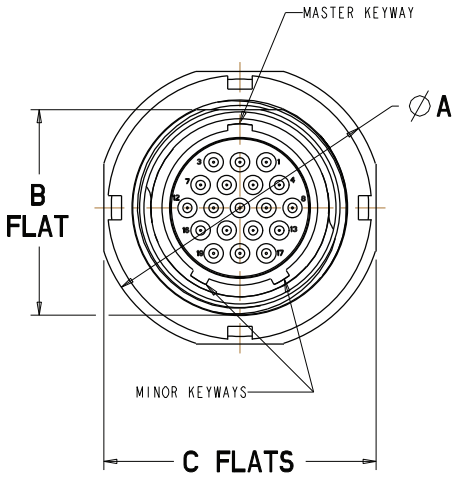

MKJ1 JAM NUT RECEPTACLE DIMENSIONS								
LAYOUT	Ø A FLANGE DIA.	B FLAT	C FLATS	D THREAD (ACME DOUBLE START)	E THREAD UN-2A	Ø F	MAX WEIGHT IN GRAMS	
							PIN	SOCKET
6-4	.635	.410	.595	.375- .05P .1L -2A	.4375-2B	.290	4.1	4.6
6-7	.635	.410	.595	.375- .05P .1L -2A	.4375-2B	.290	4.2	4.6
7-10	.755	.536	.723	.4375- .05P .1L -2A	.5625-2B	.390	6.2	7.0
9-19	.830	.596	.790	.5625- .05P .1L -2A	.625-2B	.500	7.8	9.3
13-37	1.078	.845	1.044	.8125- .1P .2L -2A	.875-2B	.650	14.6	17.3

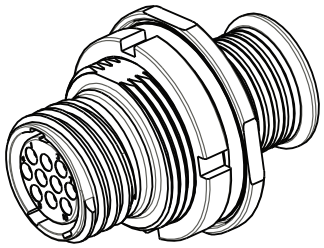

Socket Insert

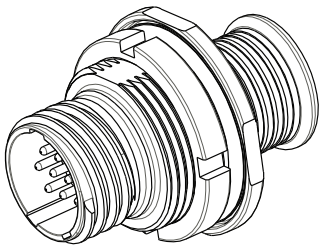

Pin Insert

Panel Cutouts

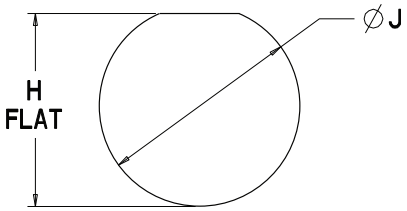

LAYOUT	H FLAT ±.002	Ø J
6 - 4	.420	.448
6 - 7	.420	.448
7 - 10	.551	.573
9 - 19	.609	.635
13 - 37	.859	.885

Dimensions shown in inches (mm)
Specifications and dimensions subject to change

MKJ1 Connectors

MKJ1 PCB Jam Nut Receptacle (PCB Mount)

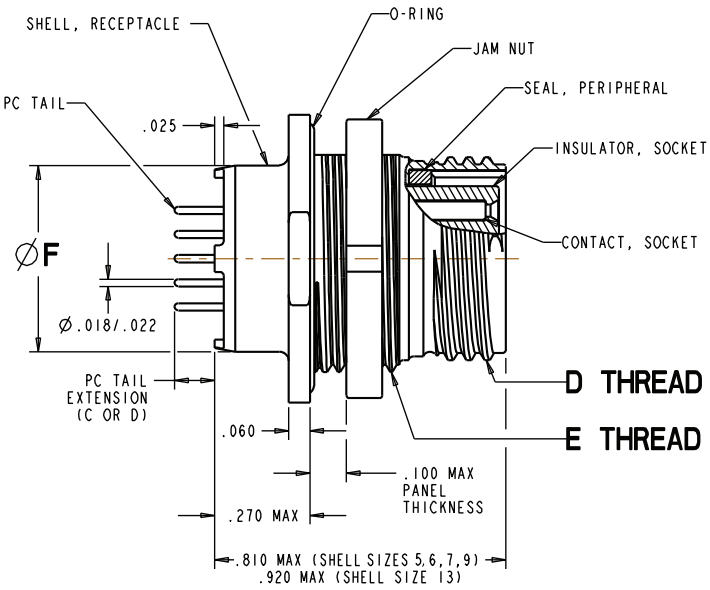

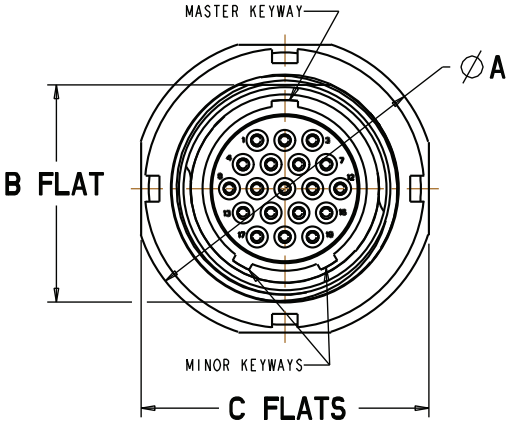

MKJ1 JAM NUT RECEPTACLE DIMENSIONS								
LAYOUT	Ø A FLANGE DIA.	B FLAT	C FLATS	D THREAD (ACME DOUBLE START)	E THREAD UN-2A	Ø F	MAX WEIGHT IN GRAMS	
							PIN	SOCKET
6-4	.635	.410	.595	.375- .05P .1L -2A	.4375-28	.322	4.4	4.9
6-7	.635	.410	.595	.375- .05P .1L -2A	.4375-28	.322	4.7	5.1
7-10	.755	.536	.723	.4375- .05P .1L -2A	.5625-28	.432	6.9	7.7
9-19	.830	.596	.790	.5625- .05P .1L -2A	.625-28	.512	9.2	10.7
13-37	1.078	.845	1.044	.8125- .1P .2L -2A	.875-28	.677	17.1	19.9

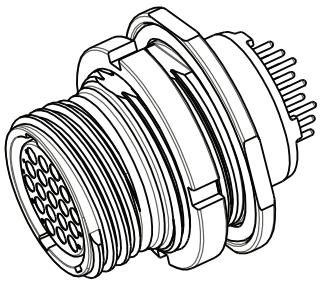
Socket Insert

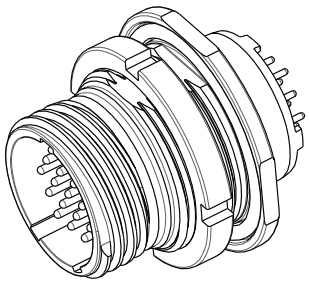
Pin Insert

Panel Cutouts

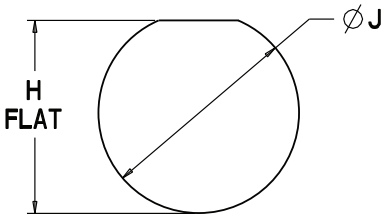

LAYOUT	H FLAT ±.002	Ø J
6 - 4	.420	.448
6 - 7	.420	.448
7 - 10	.551	.573
9 - 19	.609	.635
13 - 37	.859	.885

Receptacle Connector Orientation Front Side

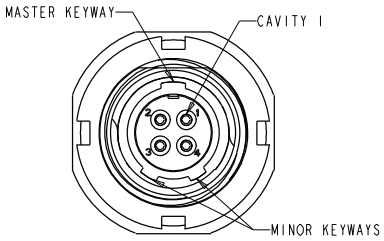

6-4 LAYOUT

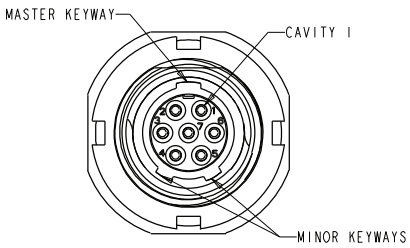

6-7 LAYOUT

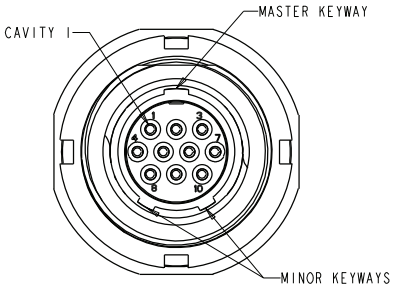

7-10 LAYOUT

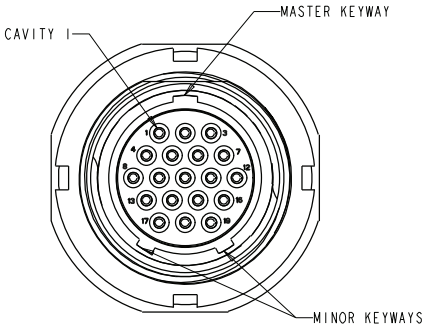

9-19 LAYOUT

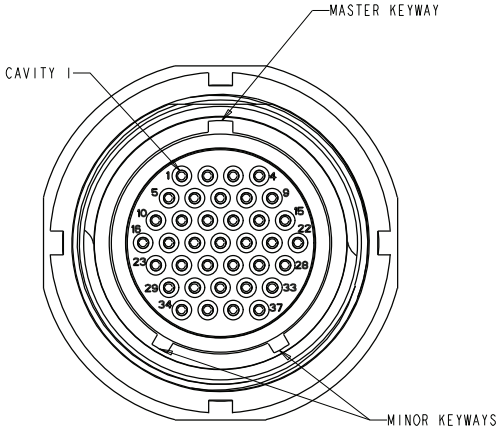

13-37 LAYOUT

Note: Socket insert front side shown for reference only. Pin insert is a mirror image.

MKJ1 Receptacle Shell Clocking Positions

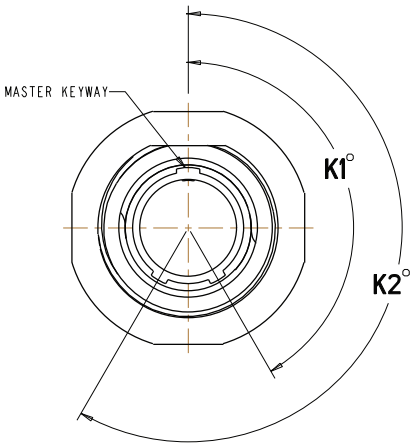

Shell Clocking
(A- Clocking Shown)

Master keyway is perpendicular with B Flat for all sizes and remains stationary at top dead center for all clockings.

SHELL CLOCKING		
POSITION	K1°	K2°
A (NORMAL)	150°	210°
B	75°	210°
C	95°	230°
D	140°	275°

Dimensions shown in inches (mm)
Specifications and dimensions subject to change

MKJ3 Connectors

The MKJ3 is ideal for quick mating, light duty applications whereweight and cost take a precedence. The connector comes with 7 high density contact arrangements, multiple clocking positions and a rear banding platform or accessory threads for backshell applications, and a rear grommet and pin interfacial seals. Used in avionics, aerospace, medical, and industrial applications.

Specifications

Contact Type	Rear crimp or PCB mount
Contacts	Size 23 (0.076" spacing), Size 16 (.177" spacing)
Wire Size	#22 - #28 AWG (Size 23 Contacts), #16 - #20 AWG (Size 16 Contacts)
Contact Rating	5 Amps Maximum
Voltage Rating	500 VAC RMS sea level
Insulation Resistance	5,000 Megaohms minimum
Operating Temperature	-55°C to +150°C
Contact Resistance	8 Milliohms maximum
Vibration	37 g's in accordance with MIL-STD-1344 Method 2005, Condition IV
Shock	300 g's in accordance with MIL-STD-1344 Method 2004, Condition E
Durability	250 mating cycles (Aluminum) or 2,000 mating cycles (Stainless Steel)
Receptacle Mounting	Jam nut or Wall Mount
EMI Shielding	40db attenuation, 100Mhz to 1000Mhz
Coupling	Bayonet
Materials	Shells - Aluminum Alloy or Stainless Steel Insulators - Thermostatic Seals - Flurosilicone Contacts - Copper alloy with gold over nickel plating

MKJ3 Plug (Banding Platform)

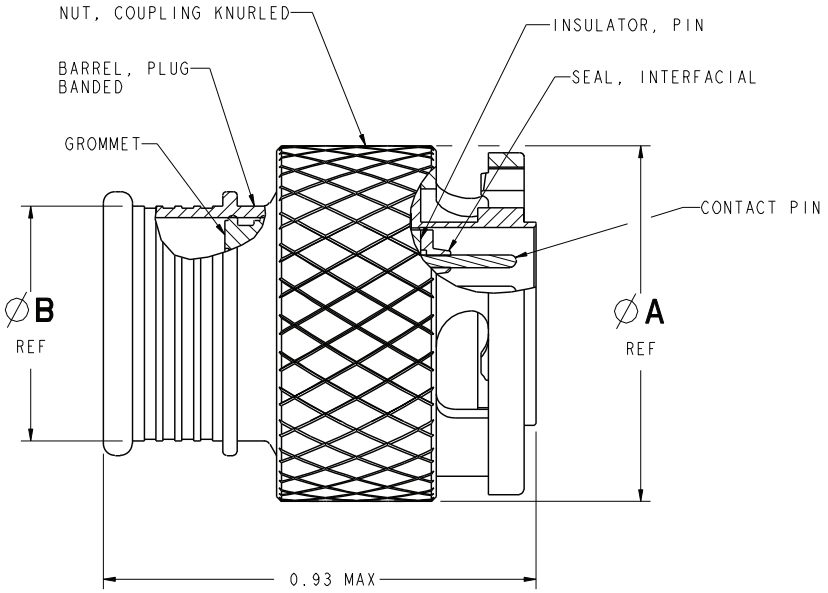

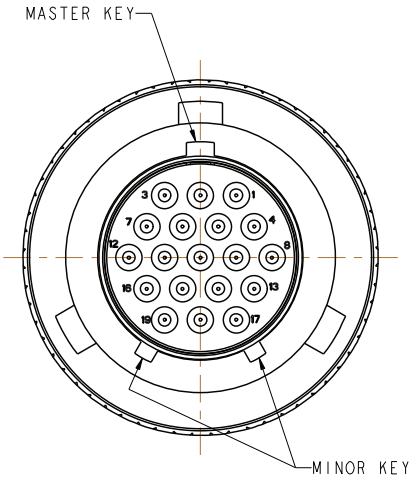

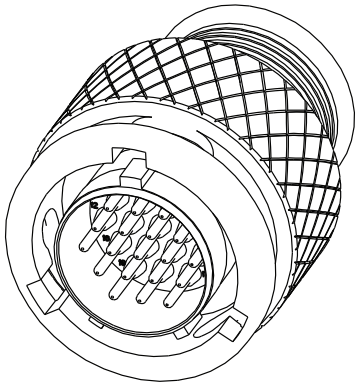

Socket Insert

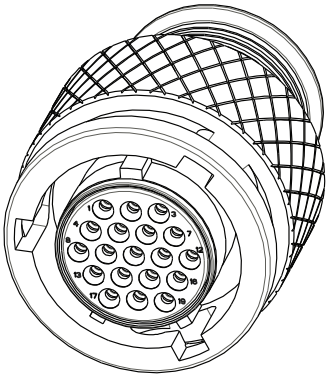

Pin Insert

MKJ3 PLUG DIMENSIONS		
LAYOUT	Ø A	Ø B
6-4	.565	.290
6-7	.565	.290
7-10	.650	.390
8-13	.750	.440
9-19	.790	.500
10-26	.875	.562
12-37	.944	.650

Dimensions shown in inches (mm)
Specifications and dimensions subject to change

MKJ3 Connectors

Connector Orientation Front Side

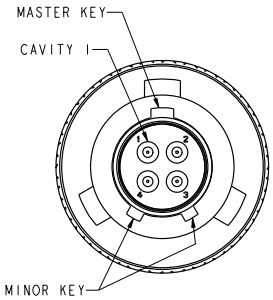

6-4 LAYOUT

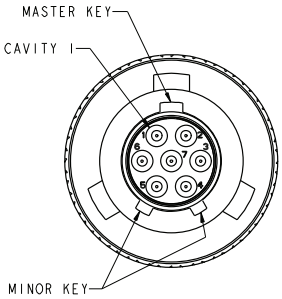

6-7 LAYOUT

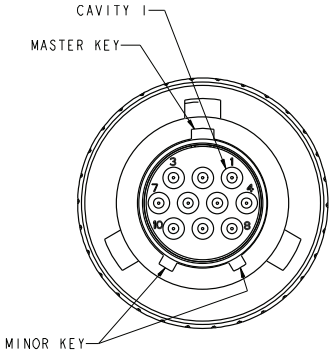

7-10 LAYOUT

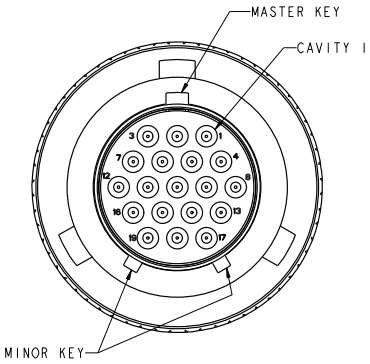

9-19 LAYOUT

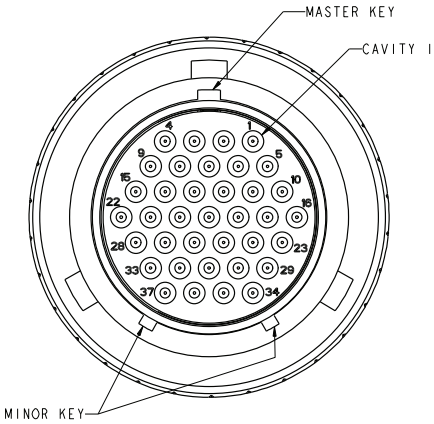

12-37 LAYOUT

Note: Pin insert front side shown for reference only. Socket insert is a mirror image.

MKJ4 Receptacle Shell Clocking Positions

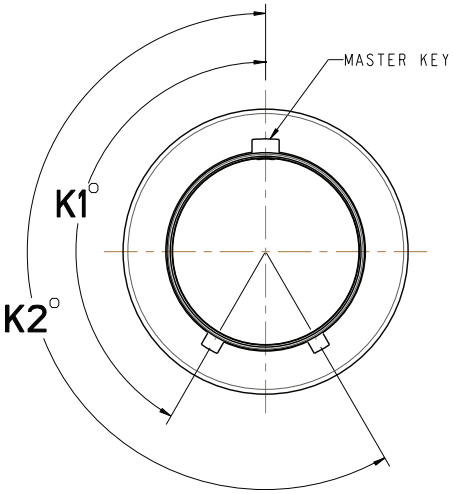

Barrel Clocking
(N- Clocking Shown)

For all Shell Sizes and Clockings, the Master Keyway remains stationary at top dead center, with minor keys rotating to achieve alternate clocking positions.

SHELL CLOCKING		
POSITION	K1°	K2°
N (NORMAL)	150°	210°
X	75°	210°
Y	95°	230°
Z	140°	275°

MKJ3 Jam Nut Receptacle (Banding Platform)

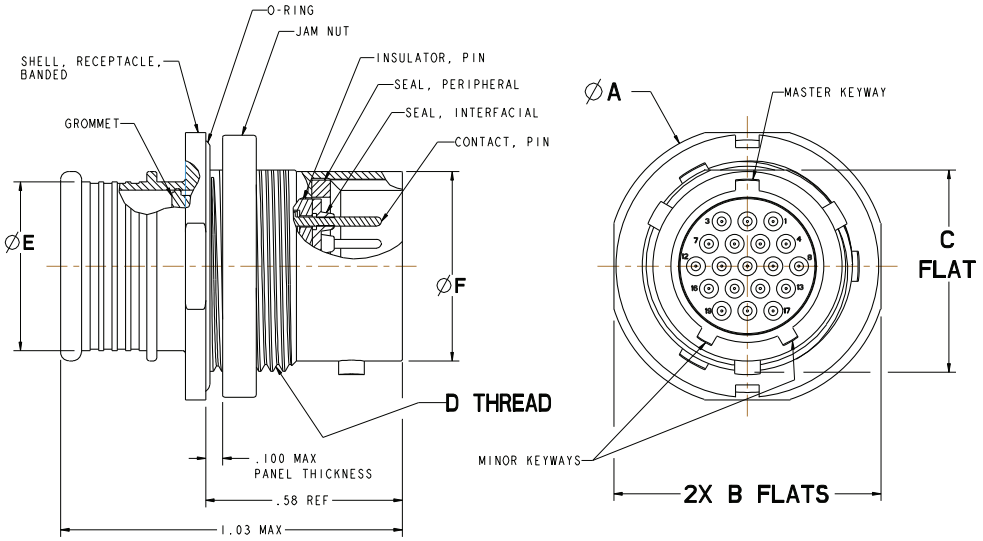

MKJ0 JAM NUT RECEPTACLE DIMENSIONS									
LAYOUT	Ø A FLANGE DIA.	B FLAT	C FLAT	D THREAD UN-2A	Ø E	Ø F	H FLAT	Ø J	MAX WEIGHT IN GRAMS
6-4	.635	.595	.410	.4375-28	.290	.362	.415	.445	TBD
6-7	.635	.595	.410	.4375-28	.290	.362	.415	.445	TBD
7-10	.755	.723	.536	.5625-32	.390	.436	.541	.572	TBD
8-13	.755	.723	.536	.5625-32	.440	.508	.541	.583	TBD
9-19	.830	.790	.596	.6250-28	.500	.561	.601	.643	TBD
10-26	.890	.855	.656	.6875-28	.562	.635	.671	.720	TBD
12-37	1.078	1.044	.845	.8750-28	.650	.714	.850	.885	TBD

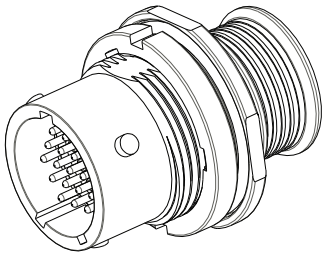

Pin Insert

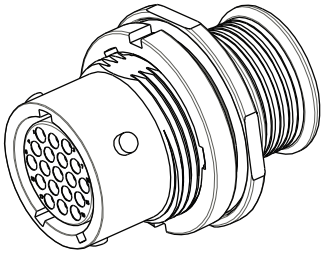

Socket Insert

Panel Cutouts

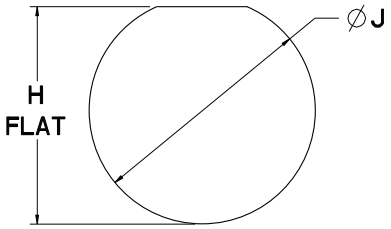

Dimensions shown in inches (mm)
Specifications and dimensions subject to change

MKJ3 Jam Nut Receptacle (PCB Mount)

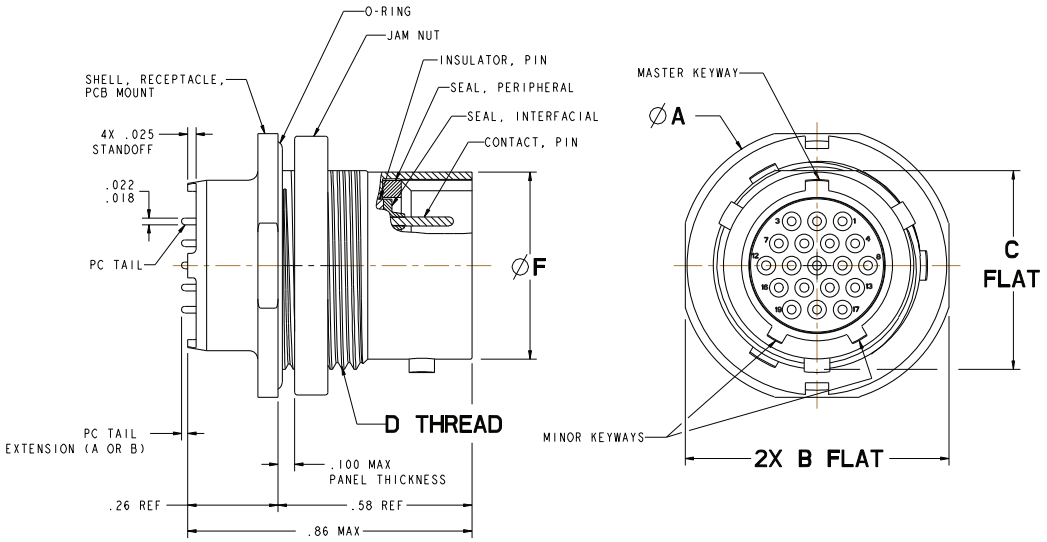

MKJ0 JAM NUT RECEPTACLE DIMENSIONS								
LAYOUT	Ø A FLANGE DIA.	B FLAT	C FLAT	D THREAD UN-2A	ØF	H FLAT	Ø J	MAX WEIGHT IN GRAMS
6-4	.635	.595	.410	.4375-28	.362	.415	.445	TBD
6-7	.635	.595	.410	.4375-28	.362	.415	.445	TBD
7-10	.755	.723	.536	.5625-32	.436	.541	.572	TBD
8-13	.755	.723	.536	.5625-32	.508	.541	.583	TBD
9-19	.830	.790	.596	.6250-28	.561	.601	.643	TBD
10-26	.890	.855	.656	.6875-28	.635	.671	.720	TBD
12-37	1.078	1.044	.845	.8750-28	.714	.850	.885	TBD

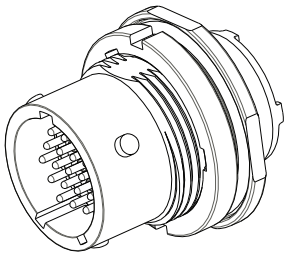

Pin Insert

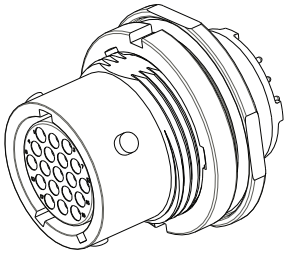

Socket Insert

Panel Cutouts

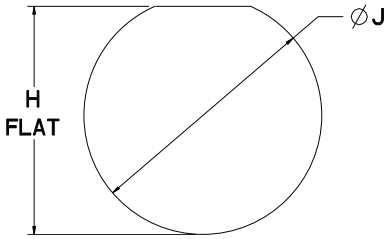

Connector Orientation Front Side

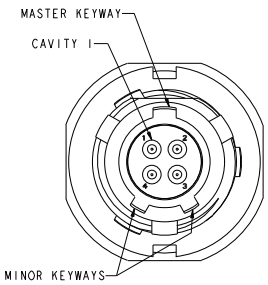

6-4 LAYOUT

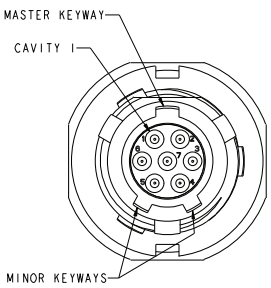

6-7 LAYOUT

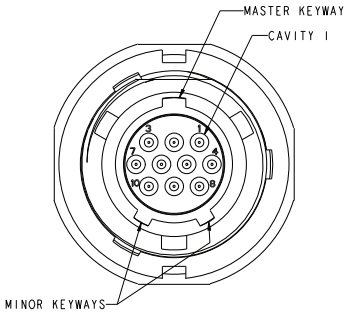

7-10 LAYOUT

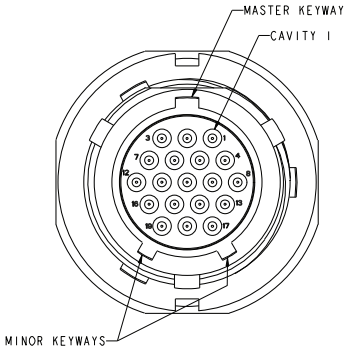

9-19 LAYOUT

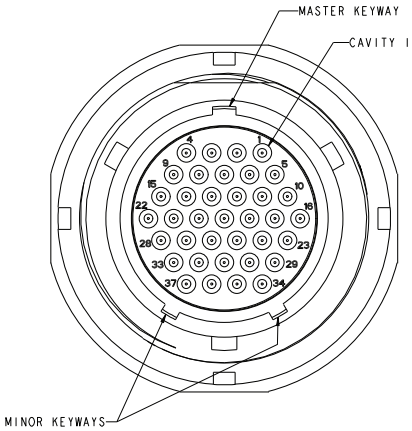

12-37 LAYOUT

Note: Pin insert front side shown for reference only. Socket insert is a mirror image.

MKJ3 Shell Clocking Positions

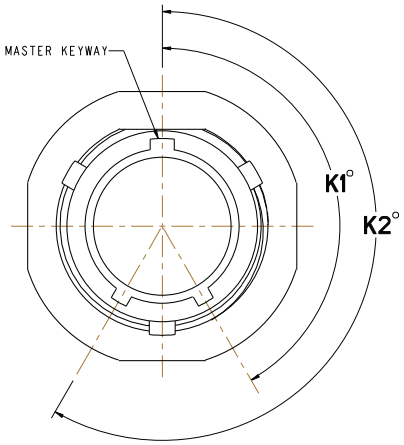

Shell Clocking
(N- Clocking Shown)

For all Shell Sizes and Clockings, the Master Keyway remains stationary at top dead center, with minor keys rotating to achieve alternate clocking positions.

SHELL CLOCKING		
POSITION	K1°	K2°
N (NORMAL)	150°	210°
X	75°	210°
Y	95°	230°
X	140°	275°

MKJ4 Connectors

The MKJ4 features a canted retention spring disconnect coupling mechanism. This durable coupling mechanism allows quick and easy mating and demating of the connector. Ideal for battlefield and medical device equipment.

Specifications

Contact Type	Rear crimp
Contacts	Size 23 (0.076" spacing), Size 16 (.177" spacing)
Wire Size	#22 - #28 AWG (Size 23 Contacts), #16 - #20 AWG (Size 16 Contacts)
Contact Rating	5 Amps Maximum
Voltage Rating	500 VAC RMS sea level
Insulation Resistance	5,000 Megaohms minimum
Operating Temperature	-55°C to +150°C
Contact Resistance	8 Milliohms maximum
Vibration	20 g's in accordance with MIL-STD-1344 Method 2005, Condition IV
Shock	50 g's in accordance with MIL-STD-1344 Method 2004, Condition E
Durability	2,000 mating cycles
Receptacle Mounting	Jam Nut
EMI Shielding	400db attenuation, 100Mhz to 1000Mhz
Coupling	Quick disconnect (Canted Spring)
Materials	Shells - Aluminum Alloy or Stainless Steel Insulators - Thermoplastic Seals - Flurosilicone Contacts - Copper alloy with gold over nickel plating Canted Coil - Stainless Steel

MKJ4 Plug (Banding Platform)

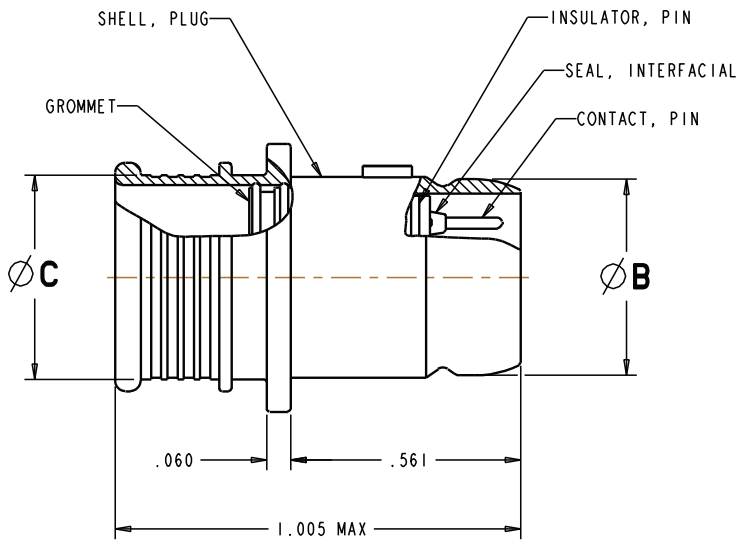

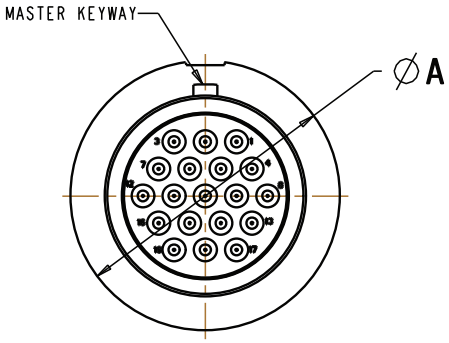

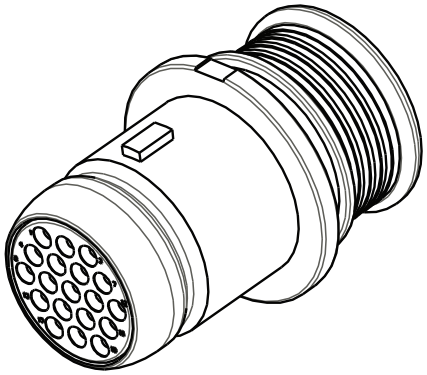

Socket Insert

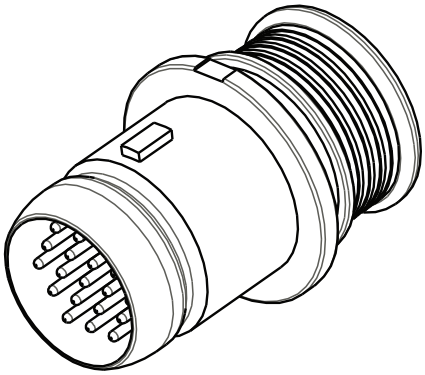

Pin Insert

MKJ4 PLUG DIMENSIONS					
LAYOUT	Ø A	Ø B	Ø C	MAX WEIGHT IN GRAMS	
				PIN	SOCKET
6-4	.485	.310	.290	2.5	3.0
6-7	.485	.310	.290	2.6	3.1
7-10	.565	.380	.390	3.7	4.5
9-19	.660	.480	.500	5.1	6.6

Dimensions shown in inches (mm)
Specifications and dimensions subject to change

MKJ4 Connectors

Connector Orientation Front Side

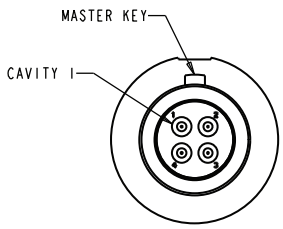

6-4 LAYOUT

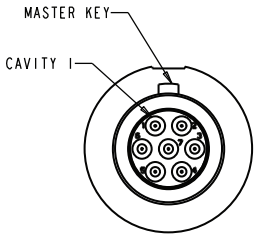

6-7 LAYOUT

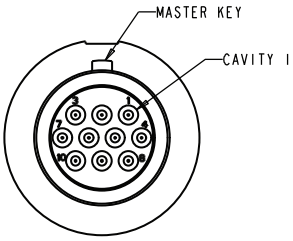

7-10 LAYOUT

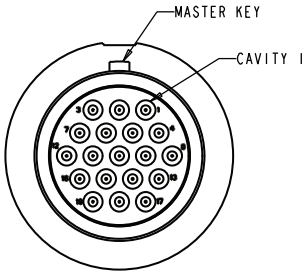

9-19 LAYOUT

Note: Pin insert front side shown for reference only. Socket insert is a mirror image.
Connectors shown withour minor keys.

MKJ4 Receptacle Shell Clocking Positions

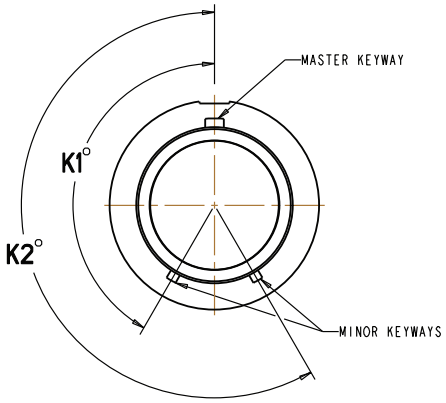

Shell Clocking
(A- Clocking Shown)

For all Shell Sizes and Clockings, the Master Keyway remains stationary at top dead center, with minor keys rotating to achieve alternate clocking positions.

SHELL CLOCKING		
POSITION	K1°	K2°
A (NORMAL)	150°	210°
B	75°	210°
C	95°	230°
D	140°	275°
NO DESIGNATION	MASTER KEY ONLY NO MINOR KEYS	

MKJ4 In-Line Receptacle (Banding Platform)

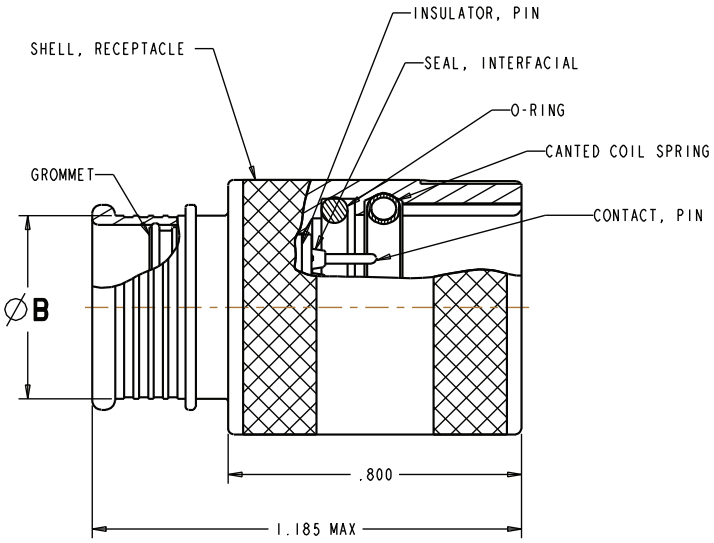

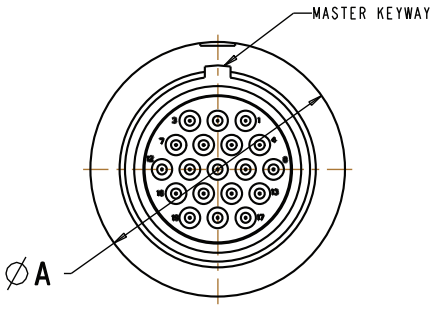

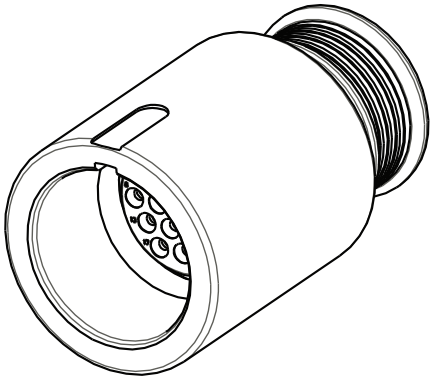

Socket Insert

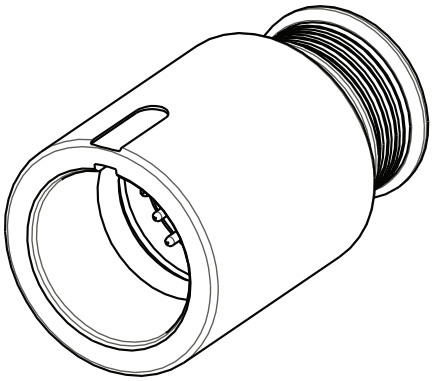

Pin Insert

MKJ4 RECEPTACLE DIMENSIONS				
LAYOUT	Ø A	Ø B	MAX WEIGHT IN GRAMS	
			PIN	SOCKET
6-4	.520	.290	6.3	6.8
6-7	.520	.290	6.4	6.9
7-10	.580	.390	7.8	8.6
9-19	.695	.500	10.7	12.1

Dimensions shown in inches (mm)
Specifications and dimensions subject to change

MKJ4 Connectors

Receptacle Connector Orientation Front Side

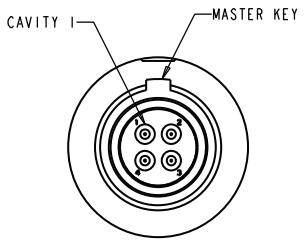

6-4 LAYOUT

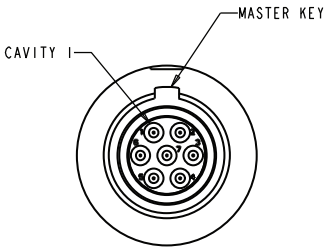

6-7 LAYOUT

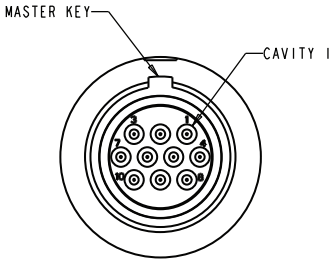

7-10 LAYOUT

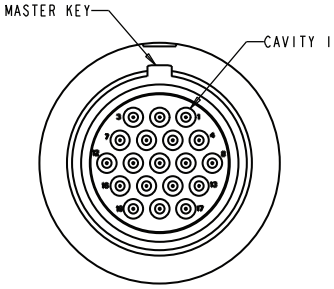

9-19 LAYOUT

Note: Pin insert front side shown for reference only. Socket insert is a mirror image.
Connectors shown without minor key ways.

MKJ4 Receptacle Shell Clocking Positions

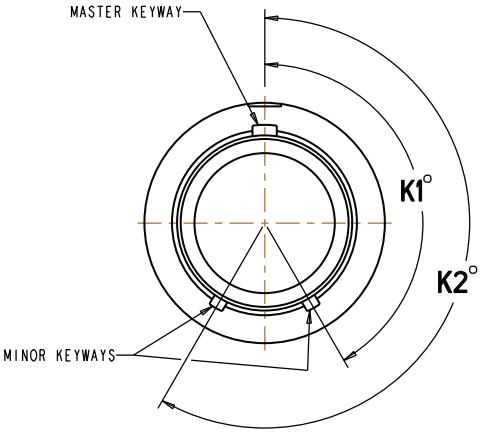

Shell Clocking
(A- Clocking Shown)

For all Shell Sizes and Clockings, the Master Keyway remains stationary at top dead center, with minor keys rotating to achieve alternate clocking positions.

SHELL CLOCKING		
POSITION	K1°	K2°
A (NORMAL)	150°	210°
B	75°	210°
C	95°	230°
D	140°	275°
NO DESIGNATION	MASTER KEYWAY ONLY NO MINOR KEYWAYS	

PCB Layout Dimensions

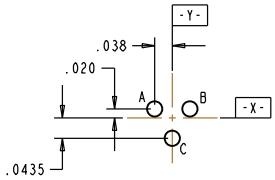

5-3

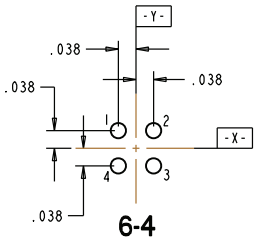

6-4

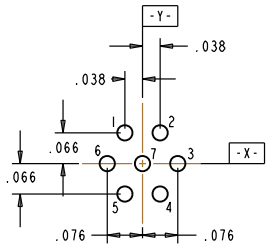

6-7

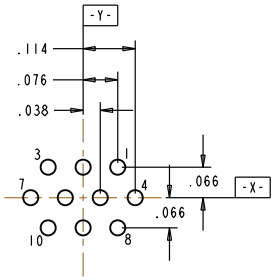

7-10

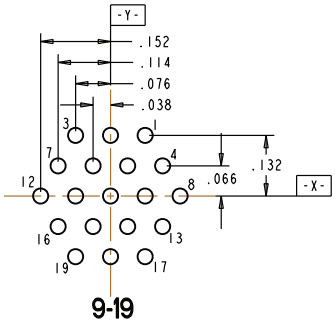

9-19

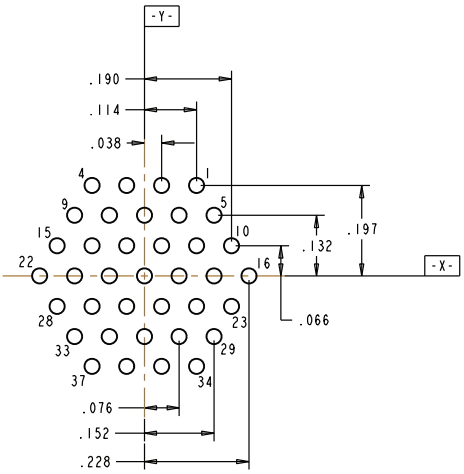

12(13)-37

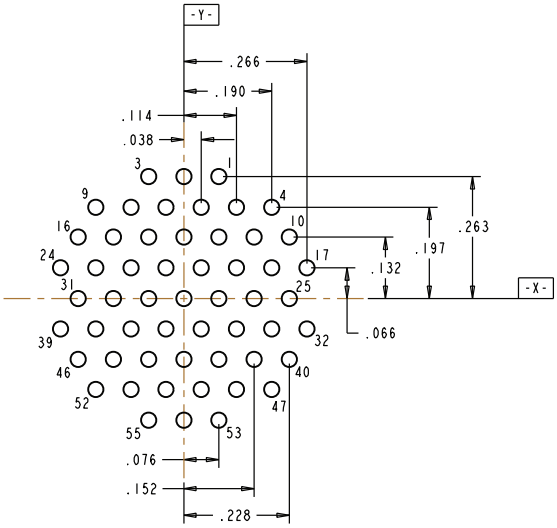

14(16)-55

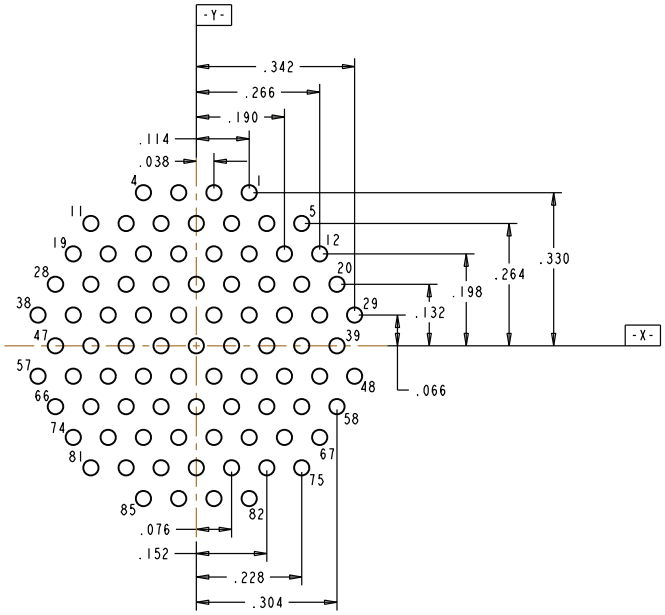

15(17)-85

Note: Layouts for pin connectors shown. Socket connectors are a mirror image.

PCB Layout Dimensions

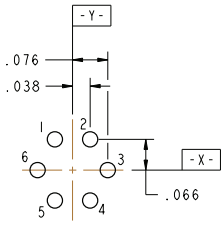

6(8)-6

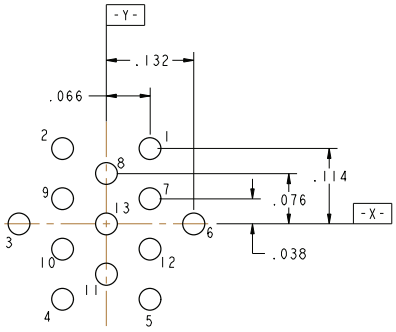

8(10)-13

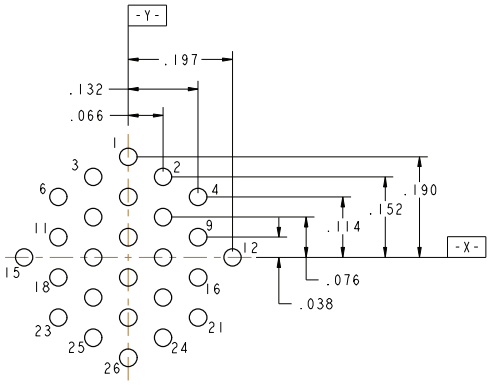

10(12)-26

Note: Layouts for pin connectors shown. Socket connectors are a mirror image.

Format Sheet-Tooling and Contacts MKJ

Crimp Contacts

Pin Contacts (Size 23)	030-9649-000
Socket contacts (Size 23)	031-9750-000

Contact Area Plating:
50 Micro inches Gold over Nickel
Accommodates Sizes #22-28 AWG Wire

Crimp Tool

Contact Crimp Tool	995-0002-293
Locator	995-0002-297

Contact Insertion/Extraction Tools

Insertion Tool	995-0002-295
Extraction Tool	995-0002-294

Banding Tools

Hand banding Tool	995-0002-298
1/8" bands (100 pk)	995-0002-299

Banding Tools

PART NUMBER	USE ON JAMNUT SIZE / PN
317-2187-000	MKJ1 (6) MKJ0 (7)
317-2187-001	MKJ1 (7) MKJ0 (9)
317-2187-002	MKJ1 (9)
317-2187-003	MKJ1 (13)
317-2187-006	MKJ0 (6)
317-2187-007	MKJ0 (12)

Dimensions shown in inches (mm)
Specifications and dimensions subject to change

MKJ Accessories

Backshells

MKJ Banding Backshell Designator - Talking Dog

MKJB S - 7 - 6 - W

Shell Material: 6061-T6 Aluminum

MKJB Straight/90°
S=Straight
N=90°
C= Clamp

Backshell Designator
1, 2, 3, 4, 5, 6, 7, 8
(See Below Table)

Plating
W= OD Cad/Ni
F = Nickel

Length (straight)
6 = .750"
8 = 1.00"
0 = 90° or Clamp Version

Clamp

Straight

90°

Backshell Designator Table

Backshell Designator	1	2	3	4		5		6		7		8	
Shell Style	MKJ0, MKJ1, MKJ3, MKJ4	MKJ0, MKJ1, MKJ3, MKJ4	MKJ5	MKJ0, MKJ1, MKJ3, MKJ4	MKJ5	MKJ0, MKJ1, MKJ3, MKJ4	MKJ5	MKJ0, MKJ1, MKJ3, MKJ4	MKJ5	MKJ0, MKJ1, MKJ3, MKJ4	MKJ5	MKJ0, MKJ1, MKJ3, MKJ4	MKJ5
Shell Size	(05) Straight	(06) Straight	(08) Straight	(07) Straight	(09) Straight	(08) Straight	(10) Straight	(09) Straight	(11) Straight	(10) Straight	(12) Straight	(12) Straight	(13) Straight

Heat Shrink Boot

Material: Fluid resistant elastomer

Adhesive: Polyamide hot melt

MKJ Heat Shrink Boot P/N's - Straight

Shell Size	ITT P/N
5, 6, 7	980-2010-017
8, 9	980-2010-018
10, 11, 12, 13	980-2010-019

MKJ Heat Shrink Boot P/N's - 90°

Shell Size	ITT P/N
5, 6, 7	980-2010-020
8, 9	980-2010-021
10, 11, 12, 13	980-2010-022

Metal Dust Caps

MKJ Aluminum Dustcap Designator- Talking Dog

MKJD 1 - 7 - P - F

Shell Material: Alluminum Alloy

Shell Style
0, 1, 3, 4, 5

Shell Size
5, 6, 7, 8, 9, 11, 12 , 13

Plating
W= OD Cad
F = Nickel
Z = Black Zinc Nickel

Gender
P= Plug
R= Receptacle

No Size 11 or 12 dustcaps are available on MKJ1
No size 11 or 13 dustcaps are available on MKJ0, MKJ3, & MKJ4
No size 5, 6, 7, or 13 dustcaps are available on MKJ5

High Vibration, Higher Temperature, Highest Sealing

ITT Interconnect Solutions has been always looking forward to satisfy their customers' needs. In order to meet these specific demands ITT ICS developed a new signal connector series for sensor applications (100V / 4A) in harsh environments. One such application is the engine compartments of both heavy diesel and gas units. ITT ICS's engineered for life design philosophy ensures that Metr1x connectors stay dry and fully functional in all situations. Engine oils, soot or even aggressive salt spray have no impact on the connector's performance or function. The connector provides EMI shielding as well as resistance against vibration of up to 20g and shock of up to 50g. In addition it is sealed to IP69K, can operate up to 150°C (+302°F) conforms to UL94-V0 and is RoHS compliant.

Metr1x Product Line Talking Dog M1X – 1 P 3 C1 – S P1

M1X **SERIES**
Metr1x

1 **SHELL STYLE**
1 - Cable Receptacle (pin)
6 - Cable Plug (socket)

P **CONTACT GENDER**
P - Pin
S - Socket

3 **CONTACT ARRANGMENT**
2 = 2-way
3 = 3-way
4 = 4-way

C1 **CONTACT TYPE**
C1 Gold plated crimp contact
0,22 mm^2 to 0,75 mm^2 (AWG 24-20)

S **CABLE TYPE**
S - Standard, without cable

P1 **VARIANT/LENGTH OF CABLE**
P1 - Piece parts with contacts, no cable
P0 - Piece parts, no contacts, no cable

Specifications

Contact Type	CGK crimp contacts, size 20
Wire Accomodation	0,22 - 0,75 mm^2 (AWG 24-20)
Housing Material	Stainless Steel V2A
Cable Diameter	6 mm
Durability	50 mating cycles
Current Rating	4A
Voltage Rating	100V dc
Mating Face	Acc. DIN EN 61076-2-1001 / Type D
Locking Torque	1,5Nm to 2,1Nm
Insulation Resistance (acc. IEC 60512. Method 3a)	1 GΩ minimum / 500 V dc
Operating Temperature	-40°C to +150 °C (-40 °F to +302 °F)
Contact Resistance (acc. IEC 60512, Method 2a)	5 mΩ maximum
Vibration (acc. IEC 60512. Method 6e)	20g rms, 5Hz to 2 kHz
Shock (acc. IEC 60512, Method 6c)	50g, half-sine, 11 ms
EMI Shielding (acc. VG95328 / VG 95343)	50 dB minimum, 30 kHz – 100 MHz
Sealing Class	IP69K, IP68 (4m / 2 hours) in mated condition
Flammability Rating	UL94-V0
Salt Spray Resistance (acc. IEC 60512, Method 11f)	48 hours
Resistance against fluids	Engine oil, diesel, cooling liquid, kerosene, hydraulic oil

RoHS COMPLIANT PART NUMBERS

Metr1x Receptacle

2-, 3-, 4-way Pin

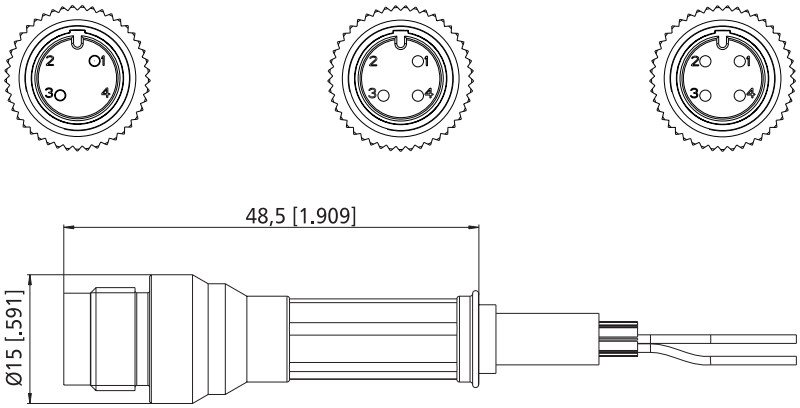

Metr1x Plug

2-, 3-, 4-way Socket

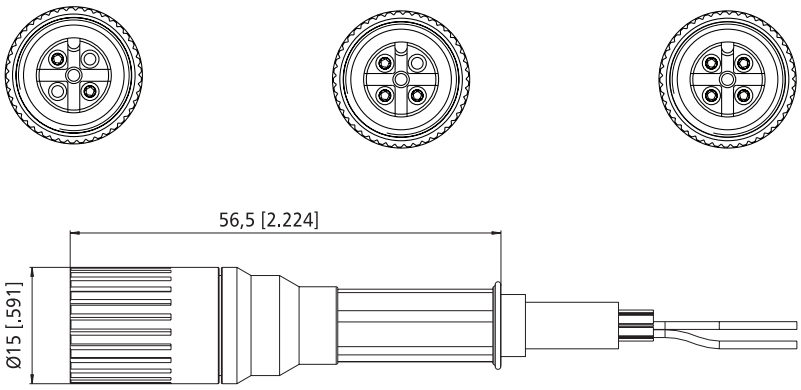

Metr1x Housing

Robust stainless steel housing is available in different versions for receptacle. Further housing variations on request.

For assembly and crimp tooling please consult factory.

MICRO-K microminiature circular connectors are rugged yet lightweight - and meet or exceed the applicable requirements of MIL-DTL-83513. Applications include biomedical, instrumentation and miniature black boxes.

MIK: Accommodate up to 55 contacts on .050 (1.27) centers (equivalent to 420 contacts per square inch). Five keyway polarization prevents cross plugging. The threaded coupling nuts provide strong, reliable coupling. MIK receptacles can be either front or back panel mounted; in back mounting applications, panel thickness of up to 3/32" can be used on the larger sizes. Maximum temperature range - 55˚C to + 125˚C.

Standard MIK connectors are available in two shell sizes accommodating two contact arrangements pre-wired to your specific requirements.

MIKM: Similar to our MIK, except has a steel shell and receptacle for improved ruggedness and RFI resistance. It accommodates up to 85 twist pin contacts. Maximum temperature range - 55˚C to + 125˚ C.

MIKQ: A quick disconnect metal shell and receptacle version that can be instantaneously disconnected yet provides a solid lock when engaged. Applications include commercial TV cameras, portable radios, military gun sights, airborne landing systems and medical equipment. Maximum temperature range - 55˚C to +125˚C.

Specifications

STANDARD MATERIAL AND FINISHES

	MIK	MIKM	MIKQ
Shell	Thermoplastic	Stainless Steel	Brass
Coupling Nut	Stainless Steel Passivated	Stainless Steel Passivated	Brass, Electroless Nickel Plated*
Insulator	Glass-reinforced Thermoplastic	Glass-reinforced Thermoplastic	Glass-reinforced Thermoplastic
Contacts	50 Microinch Gold Plated Copper Alloy	50 Microinch Gold Plated Copper Alloy	50 Microinch Gold Plated Copper Alloy

*For plug only
Electrodeposited for receptacle.

ELECTRO/MECHANICAL FEATURES

	MIK	MIKM	MIKQ
No. of Contacts	7,55	7,55, 85	7,19, 37
Wire Size	#24 AWG thru #32 AWG	#24 AWG thru #32 AWG	#24 AWG thru #32 AWG
Contact Termination	Crimp	Crimp	Crimp
Contact Rating	3 Amps	3 Amps	3 Amps
Couping	Threaded	Threaded	Push/Pull
Polarization	Keyways	Keyways	Keyways
Contact Spacing	.050 (1.27) Centers	.050 (1.27) Centers	.050 (1.27) Centers
Shell Styles	0-Wall Mtg. 6-Straight Plug	0-Wall Mtg. 6-Straight Plug	7-Jam Nut 6-Straight Plug 9-Rear Panel Mtg. Receptacle

How to Order

R MIK M 6- 55 P * ** ***

- RoHS COMPLIANCE — R
- SERIES — MIK
- CONNECTOR TYPE — M
- SHELL STYLE — 6-
- CONTACT ARRANGEMENT — 55
- CONTACT TYPE — P
- TERMINATION TYPE — *
- TERMINATION LENGTH CODE — **
- HARDWARE — ***

SERIES
MIK: Microminiature Circular

CONNECTOR TYPES
No Letter - Screw couping, plastic shell
M - Screw coupling, metal shell
Q - Push/Pull, metal shell

SHELL STYLES
0 - Wall mounting receptacle (MIK and MIKM only)
6 - Straight plug (MIK, MIKM and MIKQ)
7 - Jam nut mount (MIKQ only)
9 - Rear panel mounted receptacle (MIKQ)

CONTACT ARRANGEMENTS
7, 19, 37, 55, 85

CONTACT TYPE
P - Pin
S - Socket

TERMINATION TYPES
H - Insulated round hook-up wire
L - Uninsulated round solid wire

TERMINATION LENGTH CODE (STANDARDS)

(H) 001 -	18", 7/34 strand, #26 AWG, MIL-W-16878/4, Type E Teflon, yellow.
(H) 003 -	18",7/34 strand, #26 AWG, MIL-W-16878/4, Type E Teflon, color coded to MIL-STD-681 System I.
(L) 1 -	1/2" uninsulated solid #25 AWG gold plated copper.
(L) 2 -	1" uninsulated solid #25 AWG gold plated copper.

HARDWARE
G - Cable nut and grip (MIKQ plug only)
N - Nut only (MIKQ plug only)

NOTE: Contact types cannot be interchanged between shell styles.

Dimensions shown in inches (mm)
Specifications and dimensions subject to change

Microminiature Circular - .050" Contact Spacing
MICRO-K

Standard Wire Termination Codes

The following termination codes are listed for your information. For additional codes please refer to Appendix on page B-79 and B-81. All wire lengths are minimum.

HARNESS TYPES (H)
#26 AWG per MIL-W-16878 Type E, Teflon Stranded

Length	-All Yellow	Color Coded
3 (76.2)	020	027
6 (152.4)	019	016
8 (203.2)	026	034
10 (254.0)	029	025
12 (304.8)	028	002
18 (457.2)	001	003
20 (508.0)	038	023
24 (609.6)	009	004
30 (762.0)	010	005
36 (914.4)	011	006
48 (1219.2)	013	048
72 (1828.8)	017	046
120 (3048.0)	042	041

Contact Arrangements

Face View, Pin Side-(Male Twist Pin Contacts)

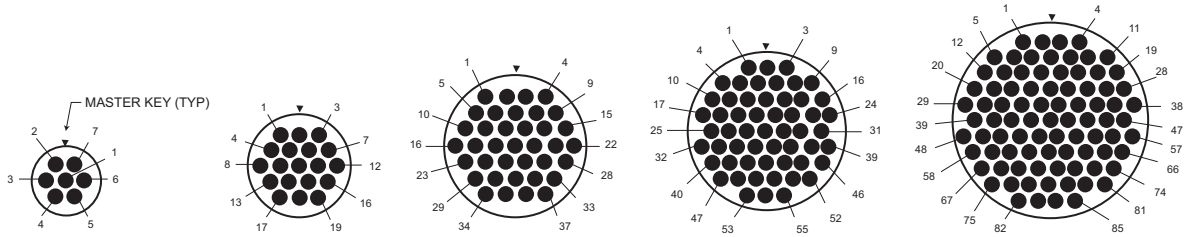

MIK/MIKM/MIKQ 7 Contacts | **MIKQ 19 Contacts** | **MIKQ 37 Contacts** | **MIK/MIKM 55 Contacts** | **MIKM 85 Contacts**

Cavity identification numbers are for reference only, they do not appear on connectors.

Shell Dimensions

MIK (Rear Panel Mount Thickness - see Tabulation "T")

Weight given is 1/2" uninsulated, solid #25 AWG gold plated copper pigtails

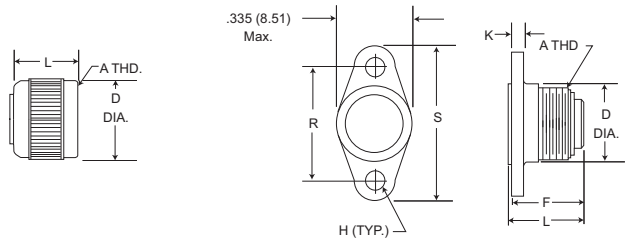

Plug | **Receptacle Shell Size 7 only**

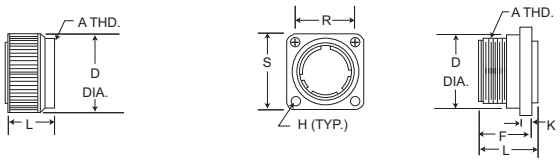

Plug | **Receptacle Shell Size 55 only**

Plug

Part Number by Shell Size	A Thread	D Max.	L Max.	Avg. Weight oz. (gm.) ±5%
MIK6-7P	5/16-24UNF-2B	.375 (9.52)	.315 (8.00)	.054 (1.54)
MIK6-55P	9/16-24UNF-2A	.755 (19.18)	.460 (11.68)	.202 (5.72)

Receptacle

Part Number by Shell Size	A Thread	D ± .010 (0.25)	F Max.	H ± .003 (0.08)	K ± .010 (0.25)	L Max.	R ± .005 (0.13)	S Max.	T Max.	Avg. Weight oz. (gm.) ± 5%
MIK0-7S	5/16-24UNF-2B	.325 (8.26)	.315 (8.00)	.078 (1.98)	.062 (1.57)	.355 (9.02)	.460 (11.68)	.630 (16.00)	.032 (0.81)	.022 (.635)
MIK0-55S	9/16-24UNF-2A	.625 (15.88)	.440 (11.18)	.089 (2.26)	.100 (2.54)	.495 (12.57)	.580 (14.73)	.760 (19.30)	.062 (1.57)	.134 (3.81)

Shell Dimensions (Continued)

MIKM (Rear Panel Mount Thickness .335 (8.51) max. - see Tabulation "T")

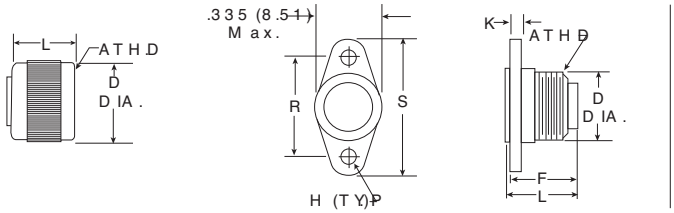

Plug — Receptacle Shell Size 7 only

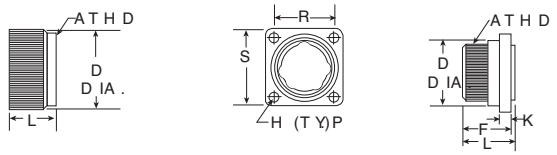

Plug — Receptacle Shell Size 55 & 85

Plug

Part Number by Shell Size	A Thread	D Max.	L Max.	Avg. Weight oz. (gm.)±5%
MIKM6-7P	5/16-24UNF-2A	.375 (9.52)	.315 (8.00)	.054 (1.54)
MIKM6-55P	5/8-24UNEF-2B	.775 (19.18)	.440 (11.18)	.333 (9.44)
MIKM6-85P	11/16-24UNEF-2B	.860 (21.84)	.460 (11.68)	.419 (11.88)

Receptacle

Part Number by Shell Size	A Thread	D	F Max.	H ± .003 (0.08)	K	L Max.	R ± .005 (0.13)	S Max.	T Max.	Avg. Weight oz. (gm.)±5%
MIKM0-7S	5/16-24UNF-2A	.325 (8.26)	.320 (8.13)	.078 (1.98)	.062 (1.57)	.400 (10.16)	.460 (11.68)	.630 (16.00)	.032 (0.81)	.051 (1.45)
MIKM0-55S	5/8-24UNEF-2A	.625 (15.88)	.440 (11.18)	.091 (2.31)	.062 (1.57)	.490 (12.45)	.580 (14.73)	.760 (19.30)	.125 (3.18)	.269 (7.62)
MIKM0-85S	11/16-24UNEF-2A	.745 (18.92)	.440 (11.18)	.091 (2.31)	.062 (1.57)	.490 (12.45)	.674 (17.12)	.845 (21.46)	.125 (3.18)	.346 (9.80)

MIKQ (Front Panel Mounting Type Shown-.093 (2.36) Thickness)

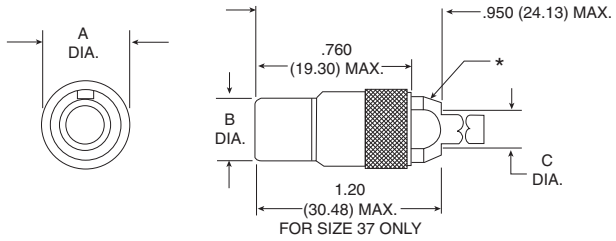

Plug

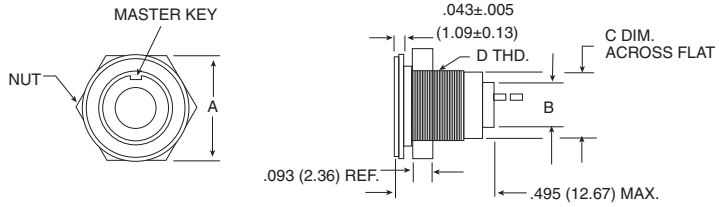

Receptacle

Plug

Part Number by Shell Size	A MAX.	B MAX.	C Ref.	Avg. Weight oz. (gm.)±5%
MIKQ7-7S	.385 (9.78)	.305 (7.75)	.180 (4.57)	.214 (6.08)
MIKQ6-19S	.515 (13.08)	.405 (10.29)	.260 (6.60)	.376 (10.70)
MIKQ6-37S	.760 (19.30)	.635 (16.13)	.350 (8.89)	.714 (20.23)

*Std. Conn. not supplied with Cable Nut & Grip, See Mod Codes. Lanyard Relase Is Available. Consult factory.

Receptacle

Part Number by Shell Size	A MAX.	B MAX.	C MAX.	D Thread	Avg. Weight oz. (gm.)±5%
MIKQ6-7S	.510 (12.95)	.245 (6.22)	.359 (9.12)	3/8-32UNEF-2A	.128 (3.63)
MIKQ7-19P	.575 (14.60)	.345 (8.76)	.470 (11.94)	1/2-28UNEF-2A	.214 (6.08)
MIKQ7-37P	.855 (21.71)	.520 (13.20)	.740 (18.80)	3/4-20UNEF-2A	.300 (8.52)

MIKQ Front Panel Mounting

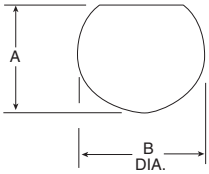

Front Panel Mounting-MIKQ7

Shell Size	A ± .005 (0.13)	B DIA.
MIKQ7-7P	.364 (9.24)	.390 (9.91)
MIKQ7-19P	.475 (12.06)	.515 (13.08)
MIKQ7-37P	.740 (18.78)	.755 (19.17)

Dimensions shown in inches (mm)
Specifications and dimensions subject to change

Shell Dimensions (Continued)

MIKQ9-7P (Back Panel Mounting)

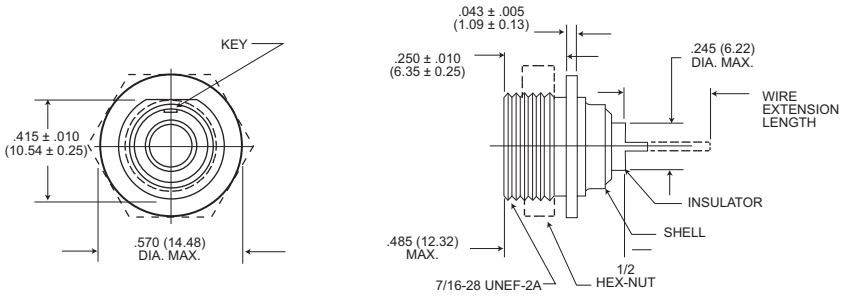

Receptacle

MIKQ9-19P (Back Panel Mounting)

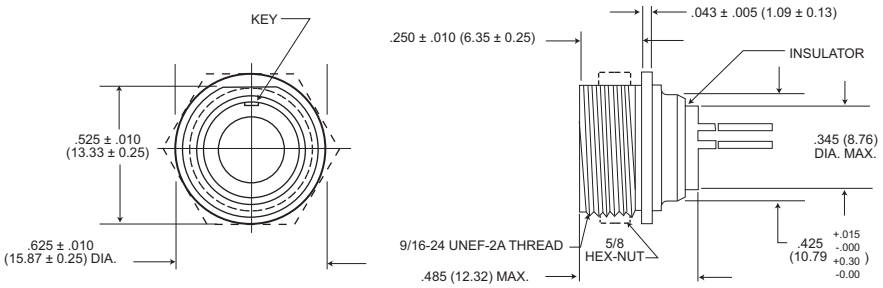

Receptacle

MIKQ9-37P (Back Panel Mounting)

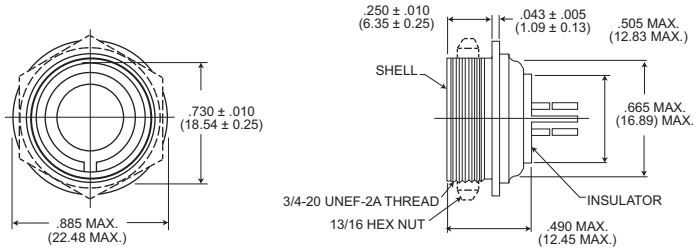

Receptacle

MIKQ Rear Panel Mounting

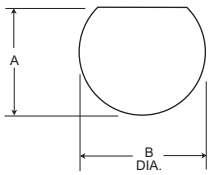

Rear Panel Mounting-MIKQ9

Shell Size	A ± .005 (0.13)	B Dia.
MIKQ9-7P	.425 (10.76)	.440 (11.18)
MIKQ9-19P	.535 (13.58)	.564 (14.33)
MIKQ9-37P	.740 (18.78)	.755 (19.17)